ECONOMIC DISPATCH FOR GENERATION COMPANY CONSIDERING WHEELING CHARGES

A DISSERTATION

Submitted in partial fulfillment of the requirements for the award of the degree

of

MASTER OF TECHNOLOGY

in

ELECTRICAL ENGINEERING

(with Specialization in Power Systems Engineering)

By

BHAVSAR YASHVANT BUDDHILAL

DEPARTMENT OF ELECTRICAL ENGINEERING
INDIAN INSTITUTE OF TECHNOLOGY ROORKEE
ROORKEE -247 667 (INDIA)

JUNE, 2007

IP

CANDIDATE'S DECLARATION

I here by declare that the work that is being presented in this dissertation report entitled **"ECONOMIC DISPATCH FOR GENERATION COMPANY CONSIDERING WHEELING CHARGES"** submitted in partial fulfillment of the requirements for the award of the degree of **Master of Technology in Electrical Engineering with specialization in Power System Engineering**, to the Department of Electrical Engineering, Indian Institute of Technology, Roorkee, is an authentic record of my own work carried out during the period of June 2006 to June 2007, under the guidance of **Dr. J. D. Sharma,** Professor, Department of Electrical Engineering and **Shri Bharat Gupta**, Assist. Professor, Department of Electrical Engineering.

The matter embodied in this Project report has not been submitted by me for the award of any other degree or diploma.

Date: 19th June, 2007

Place: Roorkee

(BHAVSAR YASHVANT BUDDHILAL)

CERTIFICATE

This is to certify that the above statement made by the candidate is correct to the best of my knowledge.

Shri Bharat Gupta
Assist. Professor,

Dr. J. D. Sharma
Professor,

Department of Electrical Engineering,
Indian Institute of Technology, Roorkee,
Uttarakhand - 247667, INDIA.

ACKNOWLEDGEMENT

Though the deepest gratitude can only be felt inside my heart, but in words with my deepest esteem I wish to express my deep sense of gratitude and sincere thanks to my guides; ***Dr. Jaydev Sharma,*** Professor, and ***Shri Bharat Gupta,*** Assist. Professor, for teaching me the pleasure of doing dissertation work and thinking broadly. With their advice, help and encouragement, not only do I finish my degree, but I also have better understanding how to think scientifically. Their keen interest and constant encouragement gave me the confidence to complete my dissertation work successfully. This work is simply the reflection of their thoughts, ideas, and concepts. I am highly indebted to them for their kind and valuable suggestions and of course their valuable time during the period of this work.

I express my deep & sincere sense of gratitude to ***Head***, Department of Electrical Engineering and ***all the faculty members*** of the department who have contributed directly or indirectly in completion of my dissertation work. I am also indebted to all my friends especially in the ***PSE*** group, over and above all well wishers who gave me moral support and encouragement throughout the duration of my dissertation.

(Bhavsar Yashvant Buddhilal)

Dedicated

To

My Family

ABSTRACT

Right from the beginning up to early 1990's, electric power supply industry was regulated by the government. Then this traditional vertically monopolistic structure of electric power supply industry has been deregulated in order to create competition. This competition in the generation & distribution market with the open access to the transmission network introduced with expectations that it would bring many benefits to the end consumers, such as lower electricity prices and better services. There were several complexity involved in restructuring and many new issues are still emerging.

Because of the deregulation it becomes necessary to have *open access* of the transmission system and hence charges must be paid to transmission system owner for its use. In this dissertation work, firstly an economic dispatch model in view of wheeling charges for bilateral contract is considered. Wheeling charges are evaluated on the basis of extent of use of transmission system by Non Utility Generators (NUG) when they transact power to their designated customer. Then this model is modified for the inclusion of power demand elasticity i.e. for maximizing social surplus.

Transmission congestion is an issue related with the transmission line limits and it takes place when all pool or bilateral/multilateral transactions would result in violation of operational constraints. An economic dispatch model with the inclusion of transmission congestion and social surplus is developed and solved which is based on the maximization of the social welfare and revenue adequacy constraints of both supplier and customer considering bus power, bus voltage and branch flow limitations.

Finally all the developed models are tested on IEEE 14 bus and IEEE 30 bus systems.

CONTENTS

LIST OF TABLES

Chapter 1

Introduction

Up to the nineties decade, electric power industry was operated as a "*regulated monopoly*". A major shift took place in the structure of electric power industry and all its operations were unbundled, i.e. de-regulated. Because of the restructuring and deregulation of the power utilities, the power industry is becoming turbulently competitive, and going through technological and regulatory changes, which affect its planning, operation, control and services to customers. It is important to identify the effects and impacts of these changes on planning, operation, control and cost of power system.

1.1 Regulation and Deregulation

The electric power industry has been dominated by the large utilities up to the last decade. These large utilities were owned by the authority and all activities like generation, transmission and distribution of power performed by them in the particular region. Such utilities have been referred as *vertically integrated utilities* which carried out its operation in *regulated* structure. There is no scope for separate calculation of costs of generation, transmission and distribution of power for this kind of structure. Therefore, the utilities often charged their customers an average tariff rate depending on their aggregated cost during a period.

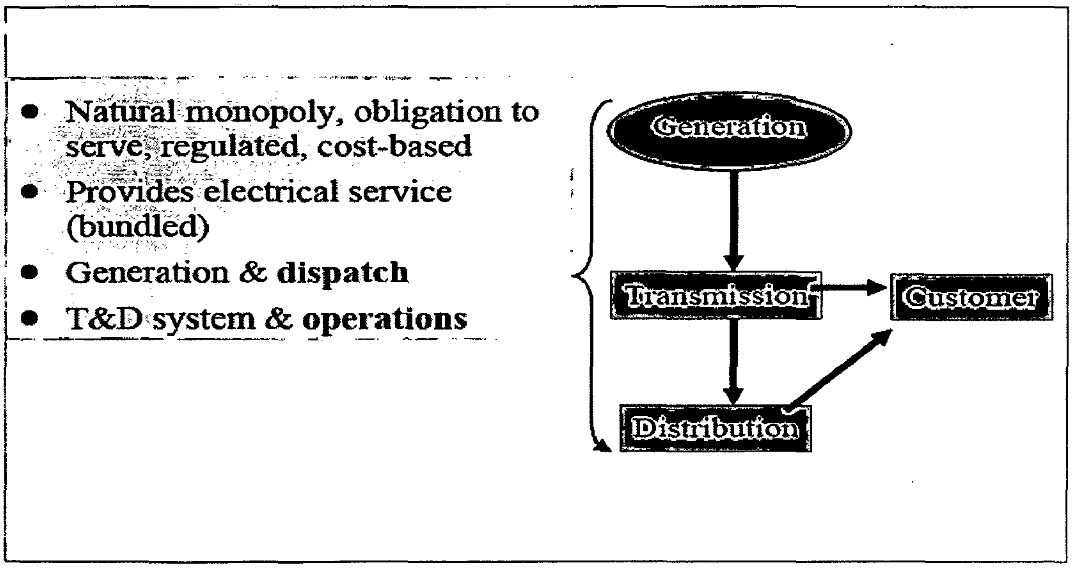

Figure 1.1: Vertically Integrated Utility - Structure and Function

The basic objective of operation and control in such vertically integrated utilities would be to minimize the total system cost while satisfying all associated system constraints. Fig 1.1 shows the structure and function of the vertically integrated utility.

The first step in the restructuring process was to separate out the generation activities from that of the distribution and transmission, following was to introduce competition in generation activities, either through the creation of power pools, provision of direct bilateral contracts or bidding the spot markets. So in competitive electricity market there may be several generation companies, Independent Power Producers (IPP) or/and Non-Utility Generators (NUG).

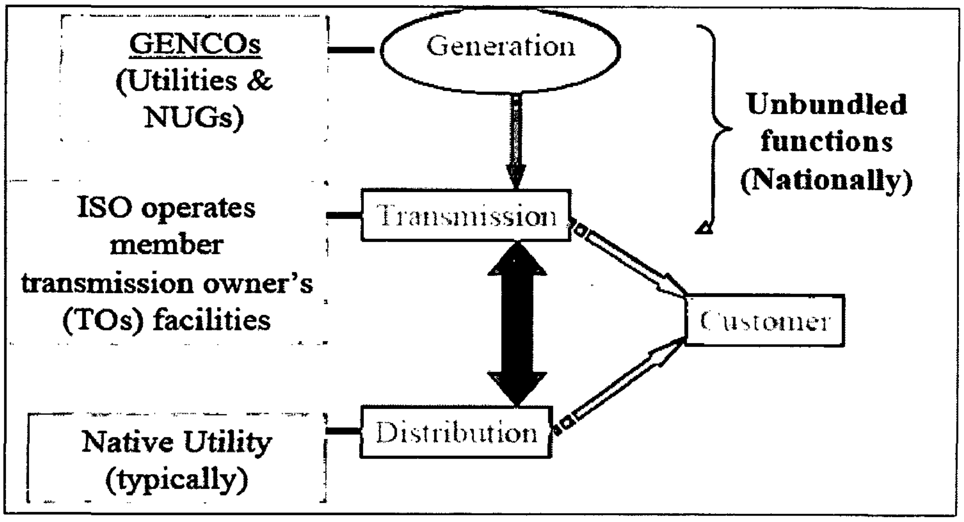

Figure 1.2: Structure of a Deregulated Electricity System

On the other hand it felt necessary to introduce regulation in transmission so as to prevent it from overcharging for its services. Hence the trend has been to establish new legal and regulatory framework offering third party *open access* to transmission network. Fig 1.2 shows the composition of an unbundled electricity system under deregulated environment.

1.2 Different Entities in Deregulated Electricity Markets

The introduction of deregulation has changed the basic structure of electricity market and brought several new entities in the market. At the same time it redefines the scope of activities of the existing individuals. Following entities can be identified and are described in brief along with their function.

1.2.1 Generation Companies (Gencos)

Genco is an owner or operator of one or more generators that runs them and sells electricity. They are commonly referred as *Independent Power Producers (IPP)* and also as *Non Utility Generators (NUG)*.

1.2.2 Transmission Companies (Transcos)

Transcos moves power in bulk quantities from where it produced to where it is delivered. The Transco owns and maintains the transmission facilities, and may perform many of the management and engineering functions required to ensure the system can continue to do its job. In most deregulated industry structures, the Transco owns and maintains the transmission lines under monopoly franchise, but does not operate them. That is done by *Independent System Operator (ISO)*. The Transco is paid for the use of its lines.

1.2.3 Distribution Companies (Discos)

It is the monopoly franchise owner-operator of the local power delivery system, which delivers power to individual businesses and home owners. In some places, the local distribution function is combined with retail function, i.e. to buy wholesale electricity either through the spot market or through direct contracts with gencos and supply electricity to the end use customers. In many other cases, however, the disco does not sell the power. It only owns and operates the local distribution system, and obtains its revenues by 'renting' space on it, or by billing for delivery of electric power.

1.2.4 Customers

A customer is entity, consuming electricity. In deregulated markets, the customer has several options for buying electricity. It may choose to buy electricity from the spot market by bidding, or may buy directly from a genco or even from the local distribution company.

1.2.5 Independent System Operator (ISO)

The ISO is an entity entrusted with the responsibility of ensuring the reliability and security of the entire system. It is an independent authority and does not participate in the electricity market trades. It usually does not own generating resources, except for some reserve capacity in certain cases. In order to maintain the system security and reliability, the

ISO procures various services such as supply of emergency reserves, or reactive power from other entities in the system.

1.3 Trading Arrangements

Under deregulation some systems must be put in place where competitive sellers of electricity can offer their product (i.e. power) and transact sales. There are two basic ways in which it can be done: Pool model and bilateral trading model. Often these models are combined in different ways to form a composite mechanism like combined pool and bilateral trades or multilateral trades.

1.3.1 Pool Model

There is only one buyer in this system. The Pool model is a governmental or quasi-governmental agency that buys for everyone, taking bids from all sellers and buying enough power to meet the total need, taking the lowest cost bidders. The Pool operator also has responsibility for running the power system, and is thus a combined buyer-system operator. In the pool model shown in Fig. 1.3, competition is initiated in the generation business by creating more than one Genco and is gradually brought to the distribution side where retailers could be separated from Discos and where consumers could be allowed to phase in a choice of retail supply.

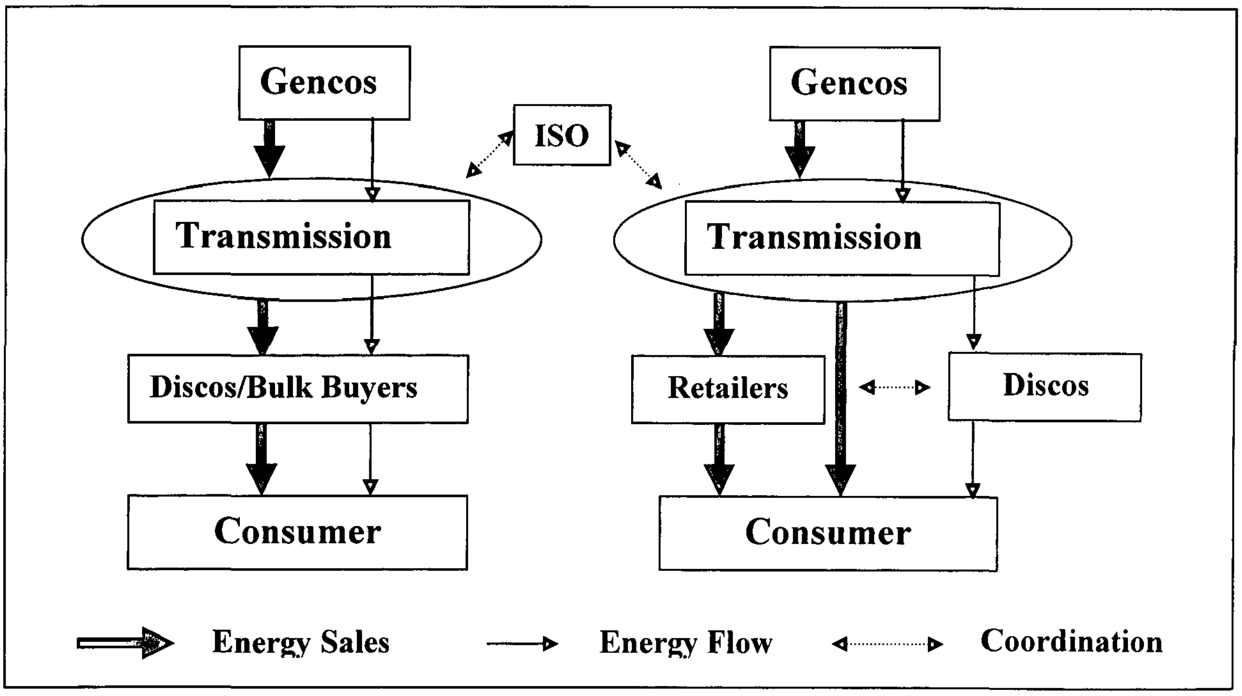

Figure 1.3: Power Pool Trade Model

The transmission system is centrally controlled by independent system operator which is disassociated from all market participants and ensures open access to transmission network. The ISO operates the electricity pool to perform a price-based dispatched and provides a forum for setting the system prices and handling electricity trades.

1.3.2 Bilateral Trade Model

Bilateral contracts are direct agreement between buyers (Distribution Company or large customer or energy brokers) and sellers (generation companies or energy brokers) and can take place in numerous forms. In this type of multi-seller/ multi-buyer system, individual buyers and sellers make a deal to exchange a power at prices and under the conditions they agree to, privately. Bilateral market structure is shown in Fig. 1.4. There is no role of ISO in the formation of these contracts and the two transacting parties are free to negotiate their price. However, once the transactions are negotiated, the ISO needs to be informed about the trades. Modeling of bilateral transaction is usually through the use of the bilateral transaction matrices (BTM).

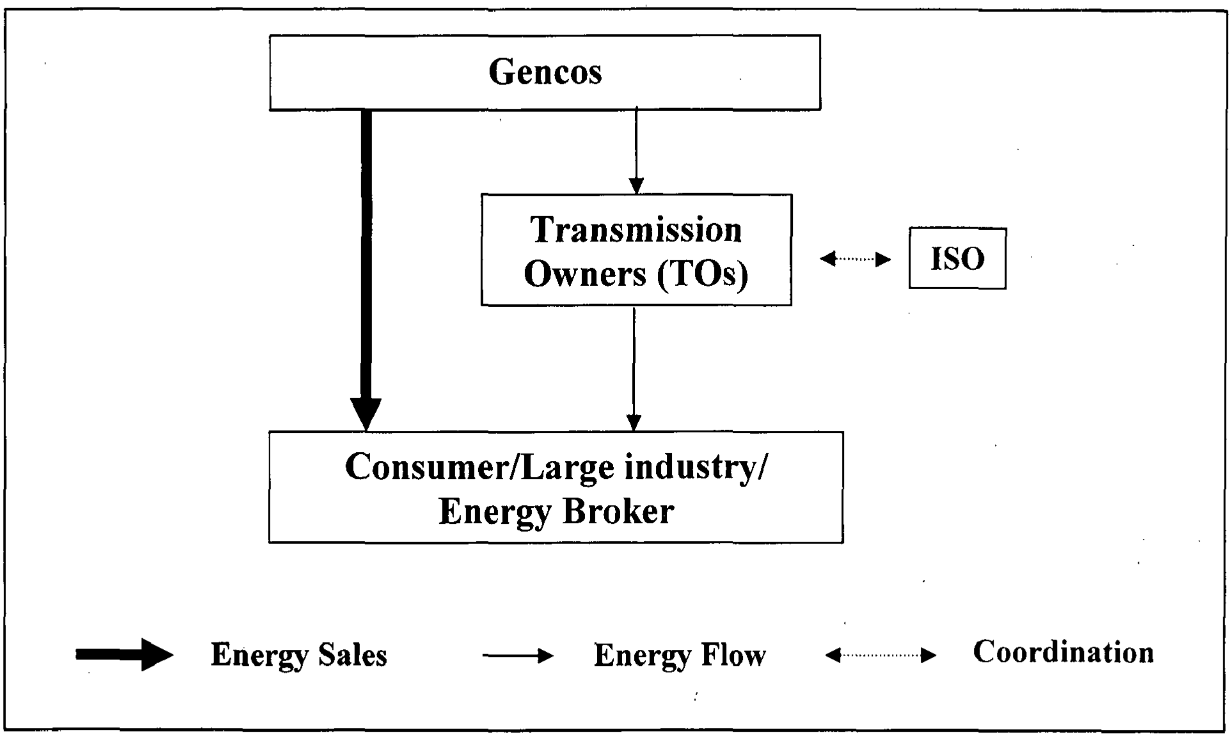

Figure 1.4: Bilateral Trade Model

From the perspective of the ISO in bilateral markets, its objective is to ensure that the system is secure and reliable. Therefore, under certain circumstances, it might be necessary for the ISO to curtail some of the transactions for system security reasons. The choice of curtailment of transaction is important to the parties involved in them, since curtailment would affect the financial deals. Therefore, in the case of bilateral market model, ISO should act in an impartial and fair manner to all parties, while deciding on the curtailment of transactions.

1.3.3 Multilateral Trades Model

Multilateral trades are a generalization of bilateral transactions where a power broker puts together a group of energy producers and buyers to form a balanced transaction. In practice, multilateral and bilateral transaction may coexist with a power pool. Conceptually the extreme case is where the concepts of pool disappear in to this multi-market structure as illustrated in Fig. 1.5.

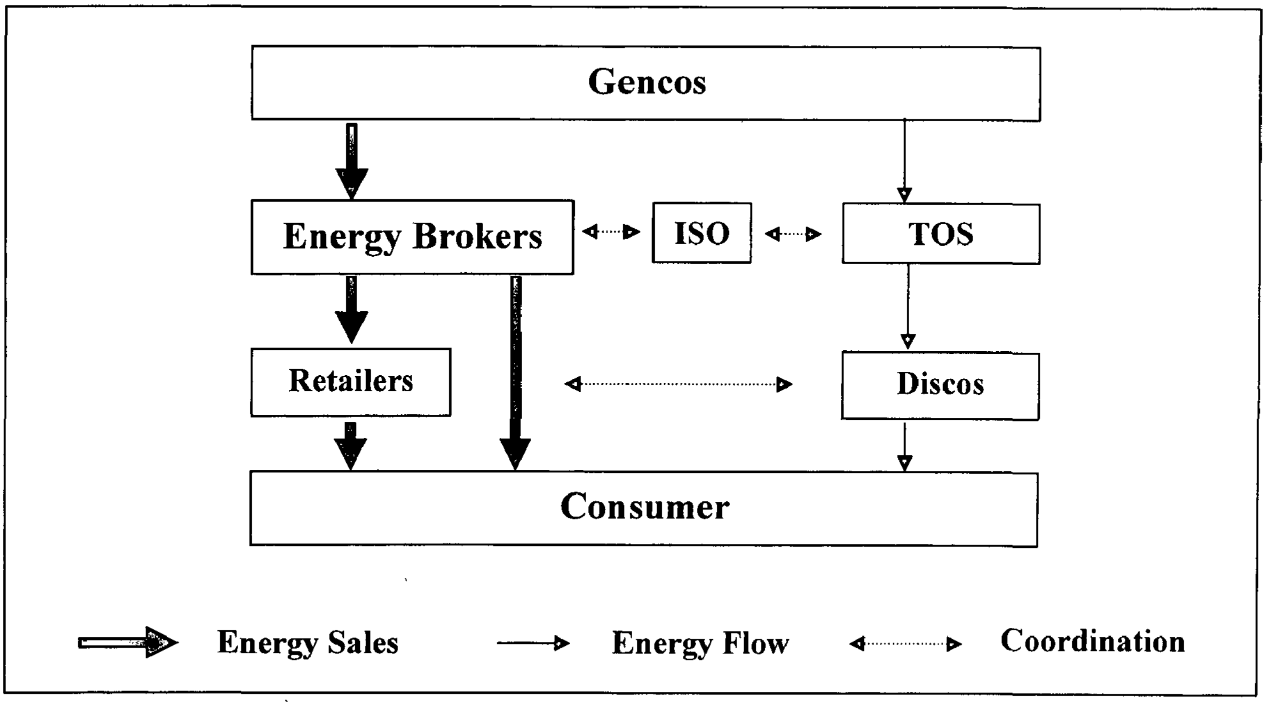

Figure 1.5: Multilateral Trades Model

Here each market is managed by a broker under its individual rules. Different market may have different rules and that could give rise to different strategies for participants. The objective of the ISO is restricted to system operation and security. All the contracts in the energy markets will be respected by the ISO without discrimination. Only when system security is threatened will the ISO interfere in managing contracted dispatches. Many of new entrants will enter in to market as intermediaries. Marketers, who buy and then resell electricity supply contracts, and brokers who arrange transaction between buyers and seller, will enter the markets. These intermediaries will have a constructive role in promoting competition but there is also the danger of price volatility and market instability.

1.3.4 Combined Pool and Bilateral Trade Model

In this model pool model will exist simultaneously with bilateral and multilateral transactions. The difference in this model and the pool model is that the transmission sector is unbundled in to 'market' sector and 'security' sector as shown in Fig. 1.6.

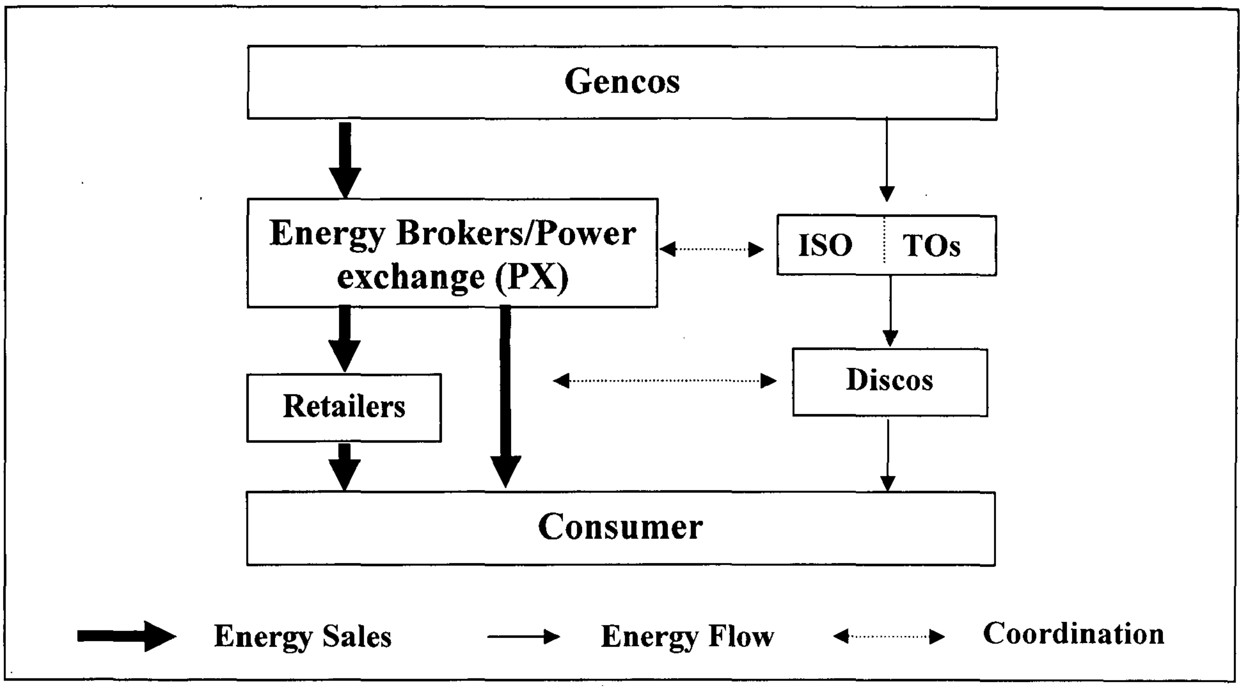

Figure 1.6: Combined Pool and Bilateral Model

In the market sector, there are multiple separate energy markets, containing a pool market taken care of by PX and bilateral contracts established by energy brokers. The ISO is responsible for system operation and guarantees system security and holds superior position over other in operational matters. Market participant may not only bid into the pool but also make bilateral contracts with each other. Therefore this model provides more flexible options for transmission access. Consumer has more choice in this type of model and hence market becomes more competitive.

1.4 Benefits of Competitive Electricity Markets

Because of the deregulation, electricity market becomes competitive. This competitive market offers customers and industry participant a range of benefits as follows:

- *Cheaper electricity*: Cheap electrical energy increases attractiveness of a region as a site for new industry and business opportunity. Lowering production costs for energy intensive consumer will allow them to re-invest more profits back into their business.
- *Pricing is cost reflective rather than a set tariff*: In deregulated environment transmission pricing is based on the transmission cost occurred to supply power to the customer. To compete in electricity markets industry participants are forced to minimize this cost.
- *Cost minimization*: Deregulation creates increased competition in selective sectors, third party access arrangements and independent economic regulation of the natural monopoly functions. Due to these factors power suppliers are pressurized to minimize the cost.
- *More Choice*: Customers have more choice in a competitive market, as retailers try to gain access of major market by offering them a range of options for buying electricity.
- *Better Service*: Only with better service and minimum pricing structure retailers can compete in the market.

1.5 Thesis Outline

As competitive electricity market grows up, more and more contracts come in to existence for power transaction between Non-utility generators (NUG) and its customer increase. They have to use the transmission network of a third party (may be of a utility which has its own transmission network or an independent organization having only the transmission network facility) to carry out this transaction and must have to pay for using the facility of respective transmission network. Moreover, due to the inclusion of these power transactions in to the power system operation, the transmission system is liable to be stressed. Due to the line flow limits, the scheduling of host utility generators is also effected to meet load demand, which may result in higher operating cost. Under this environment, to dispatch these units should not only consider the fuel costs and unit efficiency, but also take into account the wheeling charge factor.

In this dissertation work, the Economic Dispatch (ED) problem is modified to accommodate the wheeling charges. Firstly, Z-bus matrix is used to decompose the individual wheeling current from the line flow and an allocation factor for each transaction in every transmission facility in a power system is determined. The wheeling cost for a specific transaction is then calculated by aggregating the attributed cost of each facility. This obtained wheeling cost is combined with the unit fuel cost to form the objective function. During this formation the load is assumed to be fixed or inelastic, i.e. social welfare function is not included.

This problem is then extended to include the social benefit (welfare) value. For this power demand of both host utility and NUG customer is made elastic, i.e. customer power demand can be adjusted to maximize the social benefit value. Likewise, due to the bilateral power transaction between the NUG and its customer, the problem of transmission congestion may arise. This is handled by inclusion of criteria of revenue adequacy constraints for both supplier and customer which should be satisfied every time otherwise customer load curtailment would take place. Following paragraphs are intended to serve both summary and road map to the content of this dissertation.

First, in **Chapter-2**, literature survey in brief is presented.

Chapter-3 starts with the introduction to the conventional economic dispatch. Concept of wheeling and wheeling charge is provided with transmission cost components and pricing. Different methodology for transmission pricing is discussed. Then problem formulation is given for ED including wheeling charges. Next section in this chapter presents the social benefit value and their inclusion in the problem. Algorithm of optimization and to find out allocation factor is discussed.

Chapter-4 deals with the transmission congestion issue. It first gives the idea of different methods to overcome transmission congestion, and then the method which is adopted in this dissertation work is explained along with the problem formulation.

Chapter-5 gives the comparison of results which are taken for IEEE-14 bus and IEEE-30 bus system considering various ED models.

Chapter-6 summarizes the dissertation work.

these units should not only consider the fuel costs and unit efficiency, but also take into account the wheeling charge factor.

In this dissertation work, the Economic Dispatch (ED) problem is modified to accommodate the wheeling charges. Firstly, Z-bus matrix is used to decompose the individual wheeling current from the line flow and an allocation factor for each transaction in every transmission facility in a power system is determined. The wheeling cost for a specific transaction is then calculated by aggregating the attributed cost of each facility. This obtained wheeling cost is combined with the unit fuel cost to form the objective function. During this formation the load is assumed to be fixed or inelastic, i.e. social welfare function is not included.

This problem is then extended to include the social benefit (welfare) value. For this power demand of both host utility and NUG customer is made elastic, i.e. customer power demand can be adjusted to maximize the social benefit value. Likewise, due to the bilateral power transaction between the NUG and its customer, the problem of transmission congestion may arise. This is handled by inclusion of criteria of revenue adequacy constraints for both supplier and customer which should be satisfied every time otherwise customer load curtailment would take place. Following paragraphs are intended to serve both summary and road map to the content of this dissertation.

First, in **Chapter-2**, literature survey in brief is presented.

Chapter-3 starts with the introduction to the conventional economic dispatch. Concept of wheeling and wheeling charge is provided with transmission cost components and pricing. Different methodology for transmission pricing is discussed. Then problem formulation is given for ED including wheeling charges. Next section in this chapter presents the social benefit value and their inclusion in the problem. Algorithm of optimization and to find out allocation factor is discussed.

Chapter-4 deals with the transmission congestion issue. It first gives the idea of different methods to overcome transmission congestion, and then the method which is adopted in this dissertation work is explained along with the problem formulation.

Chapter-5 gives the comparison of results which are taken for IEEE-14 bus and IEEE-30 bus system considering various ED models.

Chapter-6 summarizes the dissertation work.

Chapter 2

Literature Review

Wen-chen Chu, Bin-kwie Chen and Neng-Sheng Hsu [1] proposed a new method of economic dispatch considering generation cost as well as taking in to account the wheeling charges for the use of transmission system. The objective function is formed by combining the unit fuel cost and wheeling cost. A modified megawatt-mile method for the calculation of the wheeling cost is proposed which is based on the decomposition of the wheeling current from the line flow using Z-bus matrix and determination of the utilization factor for each transaction.

Genetic algorithm based technique for economic environmental dispatch problem considering the wheeling charges is presented by Ji wang and Furong Li [2]. In problem formulation two objective functions formed; one is for minimization of fuel cost considering the generation cost and sulphur contents in fuel and other is for minimization of the wheeling cost considering the cost of transmission line and loading of the line due to generator. Constraints includes generation limit constraints for safe operation of generation, power balance constraints and emission limits constraints to limit pollution generated in the area.

S. H. Hussaini, M. Kheradmandi [3], included usage of tie-lines between regional systems to develop a method for centralized dynamic economic dispatch. Genetic algorithm is applied as an optimization tool. The cost function combined of the generation fuel cost function, output of the unit at specified time interval, price of transmission facility per unit power flow, Power flow of line and maximum capacity of the line where as constraints included total losses, load demand, maximum and minimum output of the unit, down ramp limit and up ramp limit. Price of transmission facility obtained with the help of MW-Mile method.

Ying-Yi Hong, and Chih-Yuhan Li [4], proposed Genetic Algorithm based optimal dispatch method which involves transaction of power from multiple cogeneration systems at different buses to selected customers at different buses. A model of back-pressure cogeneration system provided using enthalpy function of high pressure boiler and turbine generator. Objective function is formulated by combining fuel cost and wheeling cost considering steam balance constraints, power balance constraints and operating limit constraints. Wheeling cost is evaluated with the help of postage stamp method.

R. W. Ferrero and S. M. Shahidehpour [5] have analyzed effects of dynamic constraints on optimal transactions in deregulated power system. Assuming base load is supplied by the larger units and are mostly on; these units are excluded from scheduling. Optimal transaction schedule achieved by optimization primarily applied to generating units which are considering for trading and PoolCo consists of buyers, sellers and wheelers.

Yog Raj Sood et al [6] presented an algorithm for selection of best possible wheeling transaction in deregulated power system which is based on Available Transfer Capability (ATC) and short run marginal cost. Various methods to calculate ATC are summarized. OPF model consists of minimization of generation cost function and various constraints such as power balance, real power generation limits, reactive power limits at PV buses, voltage magnitude limits at PQ buses and power limit on transmission line.

Yog Raj Sood et al [7] used hybrid OPF model for selecting an effective transaction (wheeling) option among all available transaction options. Hybrid OPF model is combined of newton method for power flow and evolutionary programming method for economic dispatch. Mathematical model for OPF and evolutionary program based hybrid OPF presented for the base case i. e. without considering any transaction. Then the wheeling options included and algorithm for optimal selection of wheeling options is given.

A. K. David [8] presented various dispatch methodology with emphasis on the use of transmission usage charges and congestion management. Conceptual and Mathematical model of Pool Dispatch, Bilateral Dispatch and Multilateral Dispatch are derived and dispatch methodologies for forward dispatch and real time dispatch are given for multilateral dispatch. Necessity of dispatch coordination between Pool Dispatch, Bilateral Dispatch and Multilateral Dispatch is given.

R. S. Fang and David A. K [9] provided a new approach to the power dispatch problem in the structure dominated by bilateral and multilateral transmission contracts. A new framework for price-based transmission operation under open access is developed. The simple extension of the optimal power dispatch is used to solve the problem. A power flow model is developed for two types of transactions; for individual transaction between seller and buyer and for group transaction between number of generators and number of customers. Curtailment strategies like point-to-point curtailment, group curtailment and separate curtailment are included in the model.

B. L. P. P. Perera, E. D. Farmer and B. J. Cory [10] described a methodology for evaluating an optimal set of transmission prices, to be charged for use of transmission system on a time of usage basis. An important consideration of revenue reconciliation of the transmission utility is developed. Optimal pricing problem is formed with objective function for consumer benefit which include generation cost function and generation cost with un-served demand in the absence of transmission system. Constraints included nodal power balance equations, nodal power injection limits, branch flow limits. Consumer net benefit function (CNB) and Net benefit (NB) function are formed for revenue recovery of transmission utility and optimal nodal transmission price.

In [11], Paolo Marannino, Ricardo Vailati et al discussed the application of a new OPF model to the large scale systems. They first introduced a two sided auction market structure in which power demand was considered as inelastic one. These could give ISO an additional freedom of degree during the transmission congestion. For this they used the social surplus function which in case of transmission congestion is converted to merchandise surplus. Finally test results are given on CIGRE 63-bus system.

James D. Weber, Thomas J. Overbye and Christopher L. DeMarco [12] gave modification to the traditional Optimal Power Flow model with the inclusion of the price dependent loads. They first developed an OPF model based on the maximizing the Social welfare. Then they gave an alternate approach to include the social welfare in traditional OPF model. The modified OPF is then implemented in to the PowerWorld^{TM} OPF that minimizes the fuel cost.

Francisco D. Galiana, Ivana Kockar and Pablo Cuervo Franco [13] proposed a one-step optimal power flow model that dispatches the pool in combination with the privately negotiated bilateral contracts while minimizing the cost taking care of both losses and congestion. They first identified the components of pool/bilateral load and generation. Bilateral contract considered were firm, hence any curtailment due to the transmission congestion would be to the pool load. For combined pool/bilateral dispatch formulation presented in which pool generation component is found by scheduled bilateral generation. They gave generation and load revenues and expenditures followed by simulation results on 5-bus system with and without transmission congestion.

In [14] Thomas W. Gedra, gave idea to calculate optimal bus price and congestion cost for the simple power system using DC load flow. He first gave a simple example of 3-bus system to calculate congestion cost with help of bus nodal price. Then on the basis of the fact that the additional flow increases congestion by an amount of only fraction of that of the congestion multiplier, he gave an alternate idea for the calculation of the congestion charge. He also discussed to evaluate congestion charge under transmission contracts and for the case of hedging.

Dariush Shrimohammadi and et al [15], distinguished difference between transmission price and cost and illustrated how transmission costs are transferred to the transmission prices. Various transmission pricing paradigms like rolled-on transmission pricing, incremental transmission pricing and composite embedded/incremental transmission pricing are introduced.

Dariush Shrimohammadi, Chithra Rajagopalan and et al [16], identified various components of transmission cost, based on the category of transmission transaction. Evaluation of these cost components like operating cost, opportunity cost, reinforcement cost and existing system cost is given with suitable examples.

H. H. Happ [17], presented number of embedded as well as long run incremental methods of determining the costs of firm wheeling and methodologies that allocate the wheeling cost in the case of multiple wheeling. Four embedded cost of wheeling methodologies; rolled-in-embedded method, contract path method, boundary flow methods and line by line methods; are summarized and algorithms for calculation of the same are presented. Similarly four separate cost of wheeling allocation methods for long-run incremental cost (LRIC); dollar per MW allocation, dollar per MWMile allocation, interface flow allocation by regions and one-by-one allocation; are presented along with their calculation algorithms.

Ross R. Kovacs and Allen L. Leverlett [18], presented a load flow based method for allocation of the long-run cost of transmission capacity. First direct capacity cost for a given transaction on each facility is estimated with help of usage faculty and cost of that usage facility. Then based on this estimation; evaluation for embedded cost, incremental cost and marginal cost are given. Common features of all these three types of cost based on usage method are discussed. Other load flow methods like boundary flow method and generalized flow-mile methods are also described for evaluation of transmission cost.

Chapter 3

Economic Dispatch and Wheeling Charges

3.1 INTRODUCTION

The efficient operation and planning of electric power generation systems play an important role for electric utilities as well as the whole human activity. On the one hand, the efficient use of the available fuel for the production of electrical energy is of growing importance, both monetarily and because most of the primary energy sources, which today's energy supply is based on, are not renewable and have limited scope. Savings of a small percentage in the operation of a moderately large power system represent a significant reduction in operation cost as well as in the quantities of fuel consumed. On the other hand, in the future, the human community and, in particular, the power supply industry will be confronted with general economic and ecological conditions that are partly contradictory and aggravating. Some of these conditions are the rise in global energy demand; the scarcity of essential resources and the limits to the local and global environmental damage. Another contemporary challenge for the electric utility industry arises from the changes of market structures for electric power. There has been a world wide movement towards deregulation of the electric utility industry and an opening of the market to nonutility participants. All this has led and will further lead to a growth of the number and size of energy transactions.

Formerly, prior to the deregulation, the conventional Economic Dispatch (ED) activity primarily involves allocating the total load between available generating units in such a way that the total cost of operation is kept at a minimum. The essential constraint on operation is that the total generation from all units must meet the total system demand and also provide that amount of additional energy that is lost in the network due to transmission losses.

Due to the ongoing restructuring process of electric power industry, power system operation in electricity supply systems has been experiencing dramatic changes. Here ED must be handled in a different way because several utilities supplies power to their designated customers at different market price, even though at the same time they use a common transmission network. The transmission network owner, who provides transmission facility to the utilities, must be paid for his services, and these charges must be fair enough that would not create any sense of monopolize of the transmission network in one particular area.

In this chapter, first the concept of wheeling and wheeling charge is explained. Then the different transmission cost components are explained along with transmission pricing methodologies. A modified Economic Dispatch model is presented with the inclusion of wheeling charges. Now a days maximization of social welfare becomes the point of interest for utilities; hence a problem formulation is developed for maximization of social welfare including wheeling charges.

3.2 Power Wheeling and wheeling charges

Rapidly changing business environment of electric power utilities resulted in the unbundling of the services provided by these utilities. Wheeling of the electrical energy (transmission services) is one of the more prevalent of such unbundled service. In simple words, Power wheeling is:

"An arrangement between two parties for buying and selling of energy, using the transmission network owned by a third party (wheeling utility)"

For example, if utility-A transmits its power to utility-C by using the transmission network of utility-B, then utility-B is identified as wheeling utility. Wheeling transactions have been categorized in to four types depending on the location of the seller and buyer. The first, *bulk power wheeling* denotes power transaction between two utilities using the network of the third utility. When an independent customer purchases power from a utility through the intervening network of another party is *customer wheeling,* while supplier wheeling is when an independent generator sells to a utility through a third party network. The fourth type is *supplier-to-customer wheeling,* in which independent generator sells power to an independent customer through wheeling network.

In a competitive environment, there are various types of transmission transaction take place and the cost of a transaction will depend on the type of transaction carried out and the cost components considered. Based on understanding of these cost components, pricing for these transactions can be subsequently analyzed.

3.3 Transmission Transaction Cost and Pricing

Transmission transaction cost depend upon its type i.e. firm transaction, non-firm transaction which further categorized as long term, short term and as available, curtailable transactions respectively. Transmission transaction cost is that incurs in order to fulfill the transmission contracts satisfactorily and consists of several components. The major components of the "*cost of transmission transactions*" are [17, 19]:

- *Existing system cost*: capital cost and fixed cost of existing facilities.
- *Operating cost*: due to generator re-dispatch and rescheduling from the transmission transaction.
- *Opportunity cost*: benefits that utility forgoes due to operating constraints (the cheaper generators could not be used).
- *Reinforcement cost*: capital cost of new facilities, which is only charged to firm transactions.

'Transmission pricing' allocation should have following goals:

- *Recover Cost:* Fees for transmission use must produce to cover all expenses of investment, operation and maintenance, as well as provide a small level of profit for the owners.
- *Encourage efficient use:* Price structure should give incentives for efficient use of the transmission system.
- *Encourage efficient use:* Price structure should provide incentive for investment in new facilities when and where they are needed.
- *Fair:* Pricing system must be fair or equitable to all users. This means it must not unduly favor certain classes of customer or certain types of usage.
- *Understandable:* Pricing system must be understandable and simple so that its user can make good buying decision.
- *Workable:* A pricing system must not be complicated so that it cannot be implemented economically.

There are many different opinions on how transmission pricing should be done and about the only thing generally agreed is that the charges of transmission system should cover all the costs and provide a small level of profit for the owners of the transmission facilities.

One better way of transmission pricing is allocation of charges depends on the extent of use of transmission facility by utility to supply power to customer. In this dissertation work, a method of Economic Dispatch (ED) is developed taking in to the account of wheeling charge factor. These wheeling charges are calculated by using the allocation factor of usage of transmission facility by both host utility and non utility generators to supply power to their customers.

3.4 Transmission Pricing Methodologies

Prices of energy consumed by individual customer are based on the transmission pricing methodologies. These methodologies are divided in two main categories: allocation pricing methodology and incremental pricing methodology [15, 19].

3.4.1 Allocation Pricing Methodologies

In this method all the existing transmission charges are allocated among the transmission system users. These methodologies are categorized in four prevalently used allocation pricing methodologies and are described as follows:

3.4.1.1 Postage Stamp Method

This method allocates the transmission charges based on the magnitude of the transacted power. It charged at a flat rate on per MW basis i.e., the magnitude of the transacted power for a particular transmission transaction is usually measured at the time of system peak load condition:

$$R_t = TC \cdot \frac{P_t}{P_{peak}} \tag{3.1}$$

Where,

R_t : Transmission price for transaction t in mu (1 mu = 45 Rs.)

TC: Total transmission charges in mu

P_t : Transaction t load at the time of system peak load condition in MW

P_{peak} : System peak load in MW

This is the simplest method of transmission pricing and no distinction is made between transactions with regard to power flow path, supply or delivery points, or the time when it takes place. Therefore transaction of same amount of power between two adjacent buses could end up paying more than one between far of locations if the peak load on the system in later case is more. It does not take into account the increased transmission losses due to a transaction. This method is simple to handle, though not very sound economically.

3.4.1.2 MW-Mile method

Two shortcomings of the postage stamp based pricing scheme, namely, not accounting for flows on specific lines, and not accounting for the distance of the transaction (and implicitly the losses), are addressed while devising the MW-Mile method.

In this method, charges are allocated for each transmission facility to transmission transactions based on the extent of use of that facility by these transactions. The basic concept is that the power flow-mile on each transmission line due to transaction is calculated by multiplying the power flow and distance of the line. The total transmission system use is then the sum of all the power flow-miles and this provides measure of how much each transaction uses the grid. The price is then proportionate to the transmission usage by a transaction. This may be expressed mathematically as follows:

$$R_{T_i} = \sum_j \left[\frac{P_{j;T_j} \cdot L_j \cdot F_j}{\sum_i P_{j;T_i}} \right] \tag{3.2}$$

Where,

R_{T_i} : Price charge for transaction T_i in mu/MW

$P_{j;T_i}$: Loading of the line j due to transaction T_i, MW

L_j : Length of the line j, mile

F_j : Pre-determined unit cost reflecting the cost per unit capacity of the line, mu/MW-mile

This methodology allocates transmission charges facility by facility based on the maximum use of each facility. Hence it emulates the actual transmission planning process for system which is based on local considerations rather than coincident peak condition for the overall system.

3.4.2 Incremental Pricing Methodology

In these methods, either a part or all the incremental cost of accommodating a transmission transaction is assigned directly to that transaction.

3.4.2.1 Short-Run Marginal Cost (SRMC) Pricing

In this pricing methodology, the marginal operating cost of the power system due to transmission transaction is calculated first. Marginal operating cost is the cost of accommodating a marginal increase in the transacted power. The marginal operating cost per MW of transacted power can be estimated as the difference in the optimal cost of power at all points of delivery and receipt of that transaction. Then this marginal operating cost is multiplied by the magnitude of the transacted power to get the short-run marginal cost (SRMC) for the transmission transaction.

$$SRMC_t = \sum_{i \in B_t} BMC_t * P_{i,t} \tag{3.3}$$

Here, BMC is the bus marginal cost at bus i, $P_{i,t}$ is the injected power at bus i due to transaction t and B_t is the set of transmission buses involve in the transaction t.

SRMC prices for a transmission transaction are normally calculated with the transaction included in the based case. Because of this SRMC prices are higher than the actual operating cost of accommodating a transmission transaction. This extra profit can be utilized for future transmission expansion. SRMC prices for transmission transaction can be negative.

3.4.2.2 Long-Run Marginal Cost (LRMC) Pricing

In this pricing methodology the marginal operating and reinforcement cost of the power system are used to determine the prices for transmission transaction. Marginal operating cost is described in previous section. The marginal reinforcement cost is calculated as follows:

Over a long time of horizon of several years, all transmission expansion projects are identified and expenditure to be occurred is planned. This cost is then divided over the total power magnitude of all new planned transactions to calculate the marginal reinforcement cost. Four methods of long run marginal cost allocations have been suggested namely, dollar per MW, dollar per MW-mile, interface flow allocation by regions and one-by-one allocations.

3.5 Economic Dispatch Model including Wheeling Charges

Consider a system having N_{Gh} number of generators, each unit feeding power P_{Gi}, at different buses of total N_B number of buses. This is assumed to be host utility and serving its own load of P_D. A power transaction is carried out by N_{Gw} number of non utility generators (NUG), each generating power P_{si}, located at different buses to the consumer (either a large industry or a distribution company) at other buses. The objective is to reduce the generation cost for the host utility and NUG's as well as the wheeling cost for power transaction between NUG's and it's customer under certain constraints.

It can be assumed that the cost of each generator i, i.e. $C(P_{Gi})$ can be represented as a distinct curve, as shown in the Fig. 3.1, which is the cost relating to the active power which the generator delivers. Usually this curve is given for the full range of the operating capability of generators.

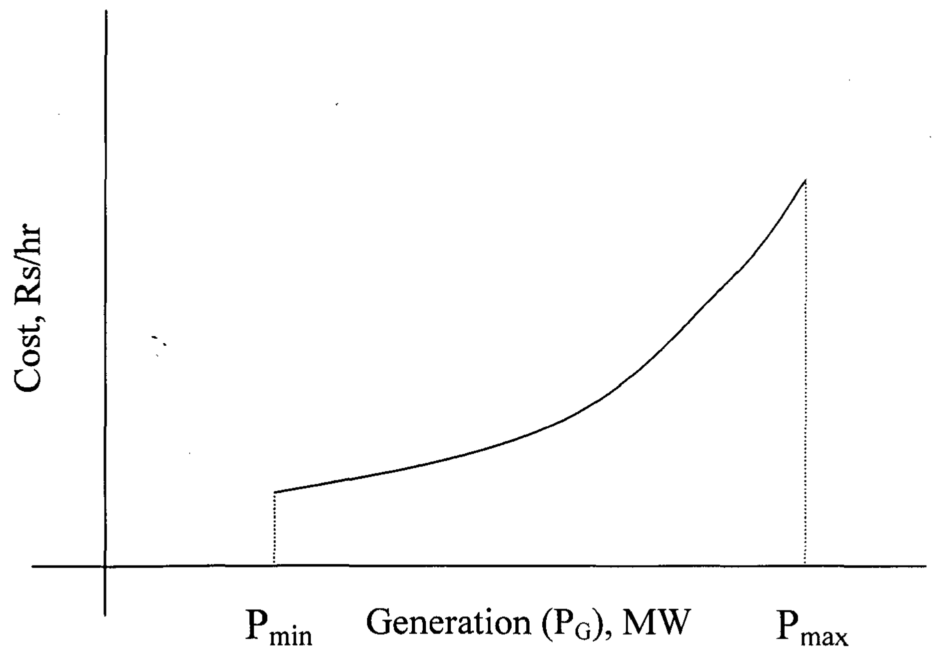

Figure 3.1: Generation Cost Curve

The general type of cost curve for i^{th} generating bus can be written as follows:

$$C_{Gi}\left(P_{Gi}\right) = a_{1i}P_{Gi}^2 + b_{1i}P_{Gi} + c_{1i} \qquad i = 1, 2\ldots\ldots N_{Gh}$$

Where P_{Gi} is in MW (or per unit) output of the generator i while a_i, b_i and c_i are constant cost coefficient terms. Hence total cost of the generation is given by

$$C_{Gi}\left(P_{Gi}\right) = \sum_{i \in N_{Gh}} (a_{1i}P_{Gi}^2 + b_{1i}P_{Gi} + c_{1i}) \tag{3.4}$$

Where N_{Gh} = Number of host utility generators.

Generation cost of Non-utility Generators can be represented with the same generation cost curve shown in Fig. 3.1., and can be written as,

$$C_{sj}\left(P_{sj}\right) = \sum_{j=N_{Gw}} a_{2j}P_{sj}^2 + b_{2j}P_{sj} + c_{2j} \tag{3.5}$$

Objective function for wheeling cost [1] is

$$W_{cost} = \frac{1}{2}\sum_{i=1}^{N_B}\sum_{j=1}^{N_B}\frac{\left|A_{ij,w}\right|}{\left|A_{ij,h}\right|+\left|A_{ij,w}\right|}W_{ij} \qquad \text{i,j} = 1,2\ldots\ldots N_B \tag{3.6}$$

Where

$A_{ij,h}$	:	Allocation factor of using transmission system for host utility between bus i and j
$A_{ij,w}$	:	Allocation factor of using transmission system for wheeling power bus i and j
W_{cost}	:	Total Wheeling cost to transact power from seller to buyer
W_{ij}	:	Price per hour of the transmission facility service between bus i and j

The objective function, to minimize Total Cost (TC), is derived from equations (3.4), (3.5) and (3.6),

$$\text{Minimize} \quad TC = \sum_{i \in N_{Gh}} C_{Gi}\left(P_{Gi}\right) + \sum_{j \in N_{Gw}} C_{sj}\left(P_{sj}\right) + W_{cost}(P_{si}, Q_{si})$$

$$\text{Minimize} \quad TC = \sum_{i \in N_{Gh}} (a_iP_{Gi}^2 + b_iP_{Gi} + c_i) + \sum_{j=N_{Gw}} \left(a_{2j}P_{sj}^2 + b_{2j}P_{sj} + c_{2j}\right) + W_{cost}\left(P_{si}, Q_{si}\right) \tag{3.7}$$

Above cost minimization function is solved with following two types of constraints.

Equality constraints

(a) Power balance equations for host utility

It is require that injection of real and reactive power at each bus sum to zero and therefore power balance equation of host utility is given by

$$P_{Gi} - P_{Li} - P(V,\delta) = 0$$
$$Q_{Gi} - Q_{Li} - Q(V,\delta) = 0 \qquad (3.8)$$

Where

V_i, δ_i : Magnitude and angle of voltage at bus i

P_{Gi}, Q_{Gi} : Active and reactive power generation at bus i

P_{Li}, Q_{Li} : Active and reactive power demand at bus i

(b) Power balance equations for NUG's and its customers

Similarly power balance equation for wheeling power is

$$P_{si} - P_{bi} - P(V,\delta) = 0$$
$$Q_{si} - Q_{bi} - P(V,\delta) = 0 \qquad i = 1, 2..... N_B \qquad (3.9)$$

Where

P_s, Q_s : Real and reactive power injection at bus by Non utility generator

P_b, Q_b : Real and reactive power received from bus by customer

Inequality Constraints

The maximum active power produced by the generator is limited by the turbine's physical limits, while maximum reactive power is often determined so that the heating of the rotor is within a specified tolerance. Therefore each generator in the network is subject to the following constraints.

(a) Reactive and Active power generation limits for host utility

Power generation from a generating unit is generally limited by upper limit and lower limit respectively.

$$P_{Gi(\min)} \le P_{Gi} \le P_{Gi(\max)}$$

$$Q_{Gi(\min)} \le Q_{Gi} \le Q_{Gi(\max)} \qquad i = 1, 2 \ldots\ldots N_{Gh} \tag{3.10}$$

(b) Reactive and Active power generation limits NUG's

Power generation from a generating unit is generally limited by upper limit and lower limit respectively.

$$P_{Si(\min)} \le P_{Si} \le P_{Si(\max)}$$

$$Q_{Si(\min)} \le Q_{Si} \le Q_{Si(\max)} \qquad i = 1, 2 \ldots\ldots N_{Gw} \tag{3.11}$$

(c) Bus voltage limits

Limits on the voltage magnitude at generation and at load buses can be expressed as

$$V_{i(\min)} \le V_i \le V_{i(\max)} \qquad i = 1, 2 \ldots\ldots N_B \tag{3.12}$$

(d) Line flow limits

$$P_{ij} \le P_{ij(\max)} \tag{3.13}$$

Where

$P_{Gi(\min)}, P_{Gi(\max)}$: Minimum and maximum limits of real power generation of generator at bus i of host utility generator.

$Q_{Gi(\min)}, Q_{Gi(\max)}$: Minimum and maximum limits of reactive power generation generator at bus i of host utility generator.

$P_{Si(\min)}, P_{Si(\max)}$: Minimum and maximum limits of real power generation of generator at bus i of NUG.

$Q_{Si(\min)}, Q_{Si(\max)}$: Minimum and maximum limits of reactive power generation generator at bus i of NUG.

$V_{i(\min)}, V_{i(\max)}$: Minimum and maximum limits of voltage at bus i.

P_{ij} : Active power flow between bus i and j.

$P_{ij(\max)}$: Maximum active power flow limit between bus i and j.

3.6 Maximizing Social Welfare Including Wheeling Charges

The performance of a market is measured by its social welfare. Social welfare is a combination of the cost of the energy and the benefit of the energy to the society as measured by the society's willingness-to-pay for it. In other words, *Social Welfare* or *Social Benefit* can be defined as

"The amount of loads those are willing to pay for the total power volume minus the costs of generators to produce this volume."

Here the generation cost function for host utility and NUG is same as given by equations (3.4) and (3.5). The wheeling cost function is also same as given by the equation (3.6).

A positive linear function is used to reveal the willingness of the customer to pay at bus k that indicates the unit energy price C_{dk} at which host utility customer will pay for a given amount of power P_{dk} [11, 12]:

$$C_{dk}\left(P_{dk}\right)=p_{0k}+p_{1k}P_{dk} \tag{3.14}$$

Customer cost function can be obtained as the integral of the equation (3.14),

$$B_k\left(P_{dk}\right)=c_{3k}+b_{3k}P_{dk}+a_{3k}P_{dk}^2 \tag{3.15}$$

Where $c_{3k}=p_{0k}$ and $b_{3k}=\frac{1}{2}p_{1k}$.

The difference of equation (3.4) and (3.15) represents the *social surplus* or *social benefit for host utility*:

$$SBh=\sum_{k=1}^{N_B}B_k\left(P_{dk}\right)-\sum_{i=N_{Gh}}C_{Gi}\left(P_{Gi}\right) \tag{3.16}$$

$$SBh=\sum_{k=1}^{N_B}a_{3k}P_{dk}^2+b_{3k}P_{dk}+c_{3k}-\sum_{i=N_{Gh}}a_{1i}P_{Gi}^2+b_{1i}P_{Gi}+c_{1i} \tag{3.17}$$

The similar equation for the NUG's and its customer can be derived as:

$$SBw=\sum_{k=1}^{N_B}B_k\left(P_{bk}\right)-\sum_{j=N_{Gw}}C_{sj}\left(P_{sj}\right) \tag{3.18}$$

$$SBw=\sum_{k=1}^{N_B}a_{4k}P_{bk}^2+b_{4k}P_{bk}+c_{4k}-\sum_{j=N_{Gw}}a_{2i}P_{sj}^2+b_{2j}P_{sj}+c_{1j} \tag{3.19}$$

Where,

P_G : Real power injection at bus by host utility generator

P_d : Real power received from bus by customer of host utility

P_s : Real power injection at bus by Non utility generator

P_b : Real power received from bus by customer

N_{Gh} : Number of host utility generators

N_{Gw} : Number of non utility generators

The objective is to maximize the social benefit value. Hence for minimization problem equation (3.17) and (3.19) can be written as:

$$\text{Minimize } SBh = \sum_{i=N_{Gh}} C_{Gi}\left(P_{Gi}\right) - \sum_{k=1}^{N_B} B_k\left(P_{dk}\right)$$

$$\text{Minimize } SBh = \sum_{i=N_{Gh}} a_{1i}P_{Gi}^2 + b_{1i}P_{Gi} + c_{1i} - \sum_{k=1}^{N_B} a_{3k}P_{dk}^2 + b_{3k}P_{dk} + c_{3k} \tag{3.20}$$

And,

$$\text{Minimize } SBw = \sum_{j=N_{Gw}} C_{sj}\left(P_{sj}\right) - \sum_{k=1}^{N_B} B_k\left(P_{bk}\right)$$

$$\text{Minimize } SBw = \sum_{j=N_{Gw}} a_{2i}P_{sj}^2 + b_{2j}P_{sj} + c_{1j} - \sum_{k=1}^{N_B} a_{4k}P_{bk}^2 + b_{4k}P_{bk} + c_{4k} \tag{3.21}$$

The objective function, to minimize Total Cost (TC), is derived from equations (3.20), (3.21) and (3.6),

$$\text{Minimize} \quad TC = SBh + SBw + W_{\cos t}$$

$$\text{Minimize} \quad TC = \left(\sum_{i\in N_{Gh}} C_{Gi}\left(P_{Gi}\right) - \sum_{k\in N_B} B_{bk}\left(P_{dk}\right)\right) + \left(\sum_{j\in N_{Gw}} C_{sj}\left(P_{sj}\right) - \sum_{k\in N_B} B_{bk}\left(P_{bk}\right)\right)$$
$$+W_{\cos t}(P_{si}, Q_{si})$$

$$\text{Minimize} \quad TC = \left(\sum_{i=N_{Gh}} a_{1i}P_{Gi}^2 + b_{1i}P_{Gi} + c_{1i} - \sum_{k=1}^{N_B} a_{3k}P_{dk}^2 + b_{3k}P_{dk} + c_{3k}\right)$$
$$+\left(\sum_{j=N_{Gw}} a_{2i}P_{sj}^2 + b_{2j}P_{sj} + c_{1j} - \sum_{k=1}^{N_B} a_{4k}P_{bk}^2 + b_{4k}P_{bk} + c_{4k}\right) + W_{\cos t}\left(P_{si}, Q_{si}\right) \tag{3.22}$$

The constraints remain same as that of the first case, i.e. given by equations (3.8) to (3.13). Additional Inequality constraints are as follows:

(a) Host utility customer load limits

$$P_{di(\min)} \le P_{di} \le P_{di(\max)}$$
$$Q_{di(\min)} \le Q_{di} \le Q_{di(\max)} \quad \text{i} = 1, 2\ldots\ldots N_B \tag{3.23}$$

(b) NUG's customer load limits

$$P_{bi(\min)} \le P_{bi} \le P_{bi(\max)}$$
$$Q_{bi(\min)} \le Q_{bi} \le Q_{bi(\max)} \quad i = 1, 2\ldots\ldots N_B \tag{3.24}$$

Where,

$P_{di(\min)}, P_{di(\max)}$: Minimum and maximum limits of host utility customer active load at bus i.

$Q_{di(\min)}, Q_{di(\max)}$: Minimum and maximum limits of host utility customer reactive load at bus i.

$P_{bi(\min)}, P_{bi(\max)}$: Minimum and maximum limits of NUG's customer active load at bus i.

$Q_{bi(\min)}, Q_{bi(\max)}$: Minimum and maximum limits of NUG's customer reactive load at bus i.

3.7 Algorithm to Find Allocation Factor

Following algorithm is used to find out the allocation factors for both, host utility and wheeling power transaction.

1. Form Z-bus matrix of the given system.
2. Considering the wheeling transaction, run load flow program to calculate bus voltages and phase angles.
3. Calculate current increase at bus i because of wheeling transaction as per given equations

$$\Delta I_{si} = \frac{P_{si} - jQ_{si}}{V_i^*}$$

$$\Delta I_{bi} = \frac{-P_{bi} + jQ_{bi}}{V_i^*} \qquad i = 1, 2\ldots\ldots N_B \tag{3.25}$$

Where

ΔI_{si} : current injected in to bus i by sellers

ΔI_{bi} : current received from bus I by buyers

4. Calculate voltage variation at bus i because of wheeling with following equation

$$\Delta V_i = \sum_{j=1}^{N_B} \left(\Delta I_{si} + \Delta I_{bi}\right) Z_{ij} \qquad i,j = 1, 2\ldots\ldots N_B \tag{3.26}$$

5. Hence obtain the current component of the wheeling transaction between bus i and j which can be expressed as

$$I_{ij,w} = y_{ij}\left(\Delta V_i - \Delta V_j\right) \tag{3.27}$$

6. Calculate current component of host utility between bus i and j with following expressions.

$$I_{ij} = y_{ij}\left(V_i - V_j\right)$$
$$I_{ij,h} = I_{ij} - I_{ij,w} \tag{3.28}$$

Where,

$I_{ij,w}$: current component of wheeling transaction between bus i and j

$I_{ij,h}$: current component of host utility between bus i and j

7. Then calculate the current allocation factor for host utility and wheeling transaction for using the transmission facility between bus i and j defined as :

$$A_{ij,w} = \frac{I_{ij} I_{ij,w}}{\left|I_{ij}\right|^2} \tag{3.29}$$

$$A_{ij,h} = \frac{I_{ij} I_{ij,h}}{\left|I_{ij}\right|^2} \qquad \text{i,j} = 1,2\ldots.. N_B \tag{3.30}$$

Where

$A_{ij,h}, A_{ij,w}$: Allocation factor of the transmission facility between bus i and bus j for host utility and wheeling transaction respectively.

Chapter 4

Transmission Congestion Management

Transmission congestion refers to the binding of the thermal limits of the transmission network. Because of the parallel path flow of the nature of electricity (electric power flows on all interconnected parallel paths in amounts inversely proportional to each path's resistance.) in the network, a certain line could be overloaded by different transactions. In vertically integrated utility structure, all entities such as generation, transmission and distribution are within domain of central energy management system. Generation is dispatched in order to achieve the system least cost operation. In such systems, congestion management is usually taken care of by determining the optimal dispatch solution using a model similar to optimal power flow or the security constrained economic dispatch problem.

This effectively means that a generation pattern is determined such that the power flow limits on the transmission lines are not exceeded. But at the same time, the presence of transmission line capacity constraints in these scheduling programs leads to higher marginal costs and reduced revenue for the utility. In the deregulated environment, with the trend of an increasing number of bilateral contracts being signed for electricity market trades, the possibility of insufficient resources leading to network congestion may be unavoidable. In this scenario, congestion management (within an OPF framework) becomes an important issue. In this chapter, we look at congestion management methodologies and the concepts of two typical financial instruments, Contract for Differences (CfDs) and Financial Transmission Rights (FTRs). Also the use of these financial instruments to hedge against price risks is explained. Finally an iterative procedure is presented to overcome transmission congestion based on revenue adequacy constraints.

4.1. Transmission Congestion Management methodologies

Different market structures and market rules lead to different methods of congestion management. There are at least two main purposes for the transmission congestion management:

- Adjust the preferred transactions to keep the power system operating within its security limits.
- Collect congestion charges from market participants and pay them to transmission grid owners to compensate their investment in the grid.

There are three fundamental methods for congestion management; transaction curtailment, transmission capacity reservation and system redispatch; which are discussed in detail in this section [14, 20, 21].

4.1.1 Transaction Curtailment

In this method, First Independent System Operator (ISO) requires to carry out analysis of the power transaction to be done between generators and loads. Then after with the information of Total Transfer Capacity (TTC) and Available Transfer Capacity (ATC), it takes decision to curtail those power transactions which are going to overload the transmission system. This method needs a set of priority rules to curtail transactions when the ATC values are reached. The three common rules are as follows:

- *Pro rata rationing:* No real priority is defined. In the case of congestion, ISO curtails transaction according to ratio: existing capacity/requested capacity.
- *Contribution based on physical low:* In this rule, ISO first defines its priority of transaction by calculating its contribution. Relative contribution to a transaction is the ratio between the flow induced by the transaction on the congested line and the total volume of the transaction. The transaction will be curtailed accordance with this rank until congestion disappears.
- *Willing-to-pay:* Transactions submit a price signal to the ISO to show how much they are willing to pay to avoid transmission curtailment imposed by the ISO during periods of congestion.

4.1.2 Transmission Capacity Reservation

In this method, transmission congestion is dealt by allocating transmission capacity rights in advance to those users who value it best. In a transmission rights auction market, each transmission user submits a price for use of transmission. The bids are selected from the highest one to the lowest one until the capacity is completely used up. In some circumstances, the counter-flowing transaction should be paid since they contribute to relieve the congestion. This method allows the integration of long-term contracts with bilateral or even spot markets. But at the same time, auctions imply additional complexity when a transaction is involved in more than one instance of congestion or when parallel flows are severe.

An alternative to the transmission capacity reservation is "first come, first served" method. The first reservation made for a given period of time has priority over the following reservations. This method encourages participants to make longer forecast. However, this method may not leave enough room for short-term trading.

4.1.3 System Redispatch

In this method, to relieve congestion and avoid undesired transaction interruptions system redispatch is done by central operator and it directs generation adjustments either incremental or decremental. The cost of these adjustments may be allocated to the responsible participants with their established tariffs or equal share among all the participants. Financial instruments may be used to provide transmission users with the opportunity to hedge against the possible high cost of congestion management.

4.2 Contract for Differences (CfDs)

CfD is a form of long-term financial bilateral power supply contract to hedge against price risks. In describing CfDs, uniform locational spot price for market participants is assumed. Imagine a generator at node i and a consumer at node j wishing to trade P_{ij}^{CfD} units of power at a certain time in the future when the system spot price in the market will be λ . However, traders wish to trade a negotiated strike price λ_{ij}^{c}. This can be achieved indirectly by signing a CfD, which can be defined as:

"Under a CfD, a consumer will pay the generator $\left(\lambda_{ij}^{c}-\lambda\right)P_{ij}^{CfD}$ where λ_{ij}^{c} is the contract price, P_{ij}^{CfD} is the contract quantity and λ is the market spot price."

4.3 Financial Transmission Rights (FTRs)

FTR, also known as Transmission Congestion Contracts (TCC), pays the right holder the price difference between the two nodes specified by that right. FTR can be defined as:

"FTR is a financial instrument that entitles holder to receive compensation for Transmission Congestion Charges that arise when the transmission grid is congested in the spot market, leading to different Locational Marginal Prices (LMPs) at different locations."

In the spot market, given the LMPs λ_i and λ_j, under an FTR with magnitude P_{ij}^{FTR} from i to j, would pay its owner $(\lambda_j - \lambda_i)P_{ij}^{FTR}$,which can be shared equally by both parties, no matter how much power flows between node i and j. This is exactly the marginal loss the transmission could suffer under congestion. One very important implication of this fact is that FTRs need not be limited to existing physical links. This allows FTRs to be applied to any bilateral transaction between two nodes anywhere in the network.

4.4 How CFDs and FTRs Hedge Price Risks?

Assume that a generator at node i who signs a CfD with a consumer at node j agree to pay the consumer the difference between a negotiated strike price and the true spot price, in exchange for a fixed payment. The consumer hereby locks in a constant price for power even in the event of transmission congestion. A CfD can be modeled by a power supply amount P_{ij}^{CfD} between the two nodes i and j at the negotiated strike price λ_{ij}^{c}.

However, if the spot price at nodes i and j differ because of transmission congestion, the whole transaction could still be exposed to the locational price risk. Given the nodal spot prices λ_i and λ_j, the payments of this CfD to the generator at node i and consumer at node j are $\left(\lambda_{ij}^{C} - \overline{\lambda_{ij}}\right)P_{ij}^{CFD}$ and $-\left(\lambda_{ij}^{C} - \overline{\lambda_{ij}}\right)P_{ij}^{CFD}$, respectively, where $\overline{\lambda_{ij}} = (\lambda_i + \lambda_j)/2$. If the spot price is much higher at the consumer's node and the average price between these two nodes is above the strike price at the consumer's node, the transaction will suffer a marginal congestion charge which equals the difference between the nodal prices. So another financial instrument, FTR, is needed to hedge the locational price risk.

FTR is a purely financial contract, according to which the holder is paid the spot prices difference between nodes times a quantity specified in the contract. For an FTR with the magnitude P_{ij}^{FTR} from i to j, where the nodal spot prices are λ_i and λ_j respectively, the owner would be paid $(\lambda_j - \lambda_i)P_{ij}^{FTR}$, which is shared equally by both parties. This is exactly the marginal loss the transaction could suffer under congestion.

4.5 Congestion Management in Economic Dispatch Framework

Here the dispatch problem is the same as given in section 4.5 whose objective is to maximize the social welfare:

$$\text{Minimize} \quad TC = \left(\sum_{i=N_{Gh}} a_{1i}P_{Gi}^2 + b_{1i}P_{Gi} + c_{1i} - \sum_{k=1}^{N_B} a_{3k}P_{dk}^2 + b_{3k}P_{dk} + c_{3k} \right)$$
$$+ \left(\sum_{j=N_{Gw}} a_{2i}P_{sj}^2 + b_{2j}P_{sj} + c_{1j} - \sum_{k=1}^{N_B} a_{4k}P_{bk}^2 + b_{4k}P_{bk} + c_{4k} \right) + W_{cost}\left(P_{si}, Q_{si}\right) \tag{4.1}$$

The explanation of notations and constraints are the same as give in section 3.5 and 3.6. To overcome the transmission congestion, an iterative procedure of dispatch is adopted in which individual revenue adequacy constraints are added.

In this procedure, consumer's profit and generator's profit are taken in to account. With full consideration of risk hedging financial instruments, a consumers profit can be formulated as [21]:

$$R_{di} = B_i\left(P_{di}\right) - \lambda_i P_{di} + \sum_j \left(\left(\lambda_{ij}^C - \bar{\lambda}_{ij} \right) P_{ij}^{CFD} \right) + \sum_j \left(\left(\lambda_j - \lambda_i \right) P_{ij}^{FTR} / 2 \right) \tag{4.2}$$

Where the first term is the value of the power purchased, the second is the cost of the power, the third is the payment from signed CfDs, and the last one is the payment from FTRs.

Similarly, generator profit can be formulated as below [21]:

$$R_{gi} = \lambda_i P_{gi} - C_i\left(P_{di}\right) + \sum_j \left(\left(\lambda_{ij}^C - \bar{\lambda}_{ij} \right) P_{ij}^{CFD} \right) + \sum_j \left(\left(\lambda_j - \lambda_i \right) P_{ij}^{FTR} / 2 \right) \tag{4.3}$$

To maintain the incentive of a market participant to implement its transactions, its profit should be higher than minimum profit level, which may consist of operating costs and the cost for purchase of the FTRs. Here it is represented by an individual revenue adequacy constraint:

$$R_d \geq R_{di,\min} \tag{4.4}$$

$$R_g \geq R_{gi,\min} \tag{4.5}$$

Where R is the profit of respective market participant and R_{min} is the minimum profit constraint of corresponding market participant. This iterative procedure is shown in Fig. 4.1.

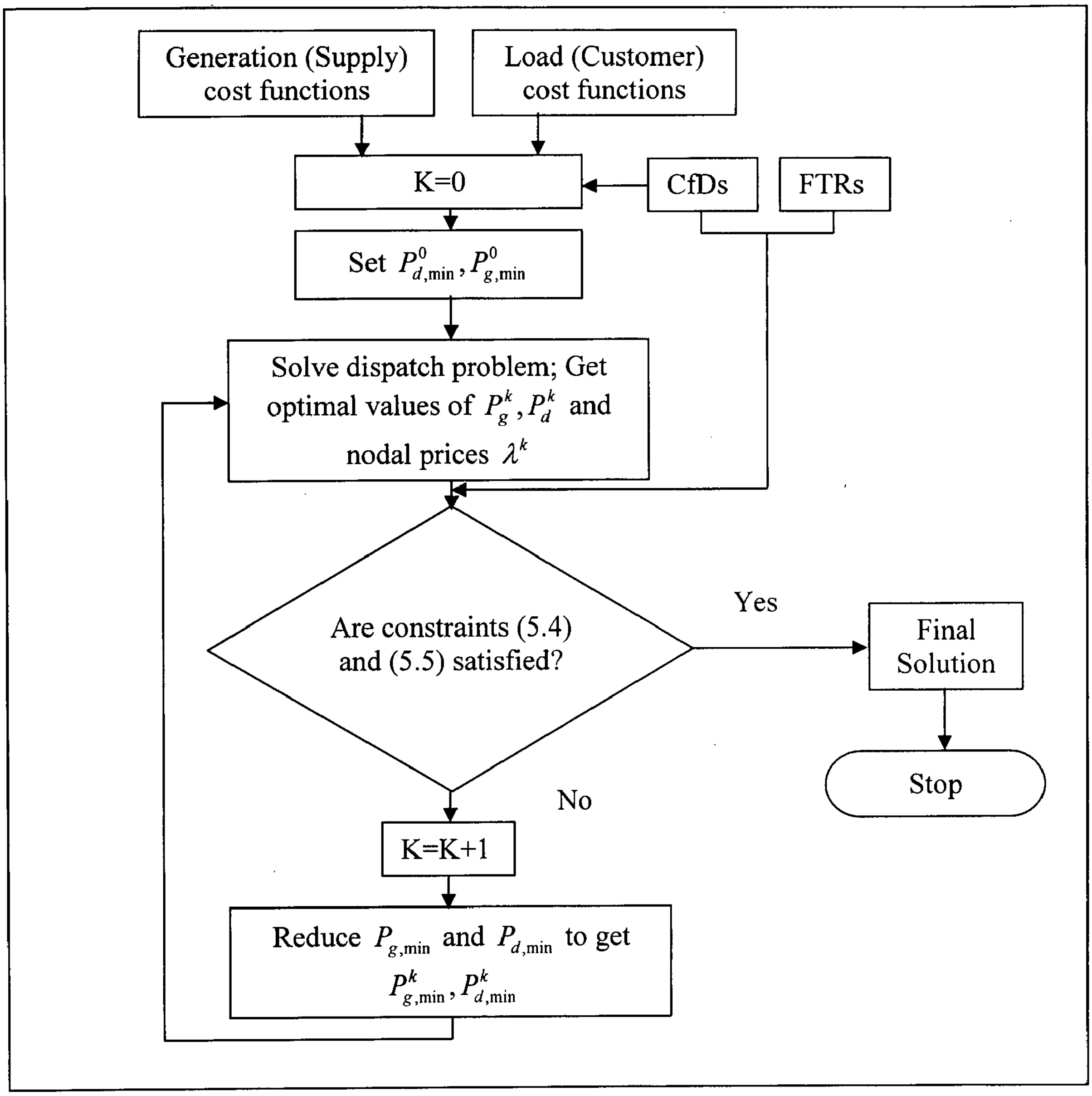

Figure 4.1: Iterative Procedure to Solve Optimal Dispatch with Revenue Adequacy Constraints

First set the lower MW limits of all the generators and consumers according to their physical operation limits and the existing bilateral transactions. Then solve the dispatch problem (4.1) by the use of optimization method to obtain optimal generation, demand and nodal prices. Check for the revenue adequacy constraints of all the participants. If any of these constraints cannot be satisfied, reduce the corresponding participants lower MW limits and then solve the problem (4.1) again.

There are at least two ways to adjust the lower limits of participants. The first is to reduce the lower MW limits step by step at each iteration. In this way convergence can be reached smoothly but a bit slowly. The second way is to obtain the minimum value of P_{di} or P_{gi} that satisfies equations (4.4) and (4.5), then update the lower MW limits with these values. With this method, the procedure can reach convergence faster, but some transactions can be over-curtailed. If minimum profit of a participant is so high that equations (4.4) and (4.5) cannot be satisfied even when $P_{di}^k \geq P_{di,\min}^k$ or $P_{gi}^k \geq P_{gi,\min}^k$, then the revenue adequacy constraint of this participant will be removed from the iterative procedure.

Chapter 5

Results and Comparison

As mentioned in previous chapters, all the formulated problems are solved with Sequential Quadratic Programming (SQP) algorithm in MATLAB. The results are taken for IEEE-14 bus and IEEE-30 bus system. In this chapter, a comparison of these results is given for all cases, with and without the inclusion of social benefit function, and with transmission congestion. Here active powers are in MW, reactive powers are in MVAR, all voltages are in p. u., angles are in radians and costs are given in mu/hr (1 mu = 45 Rs.).

5.1 IEEE-14 Bus System Data

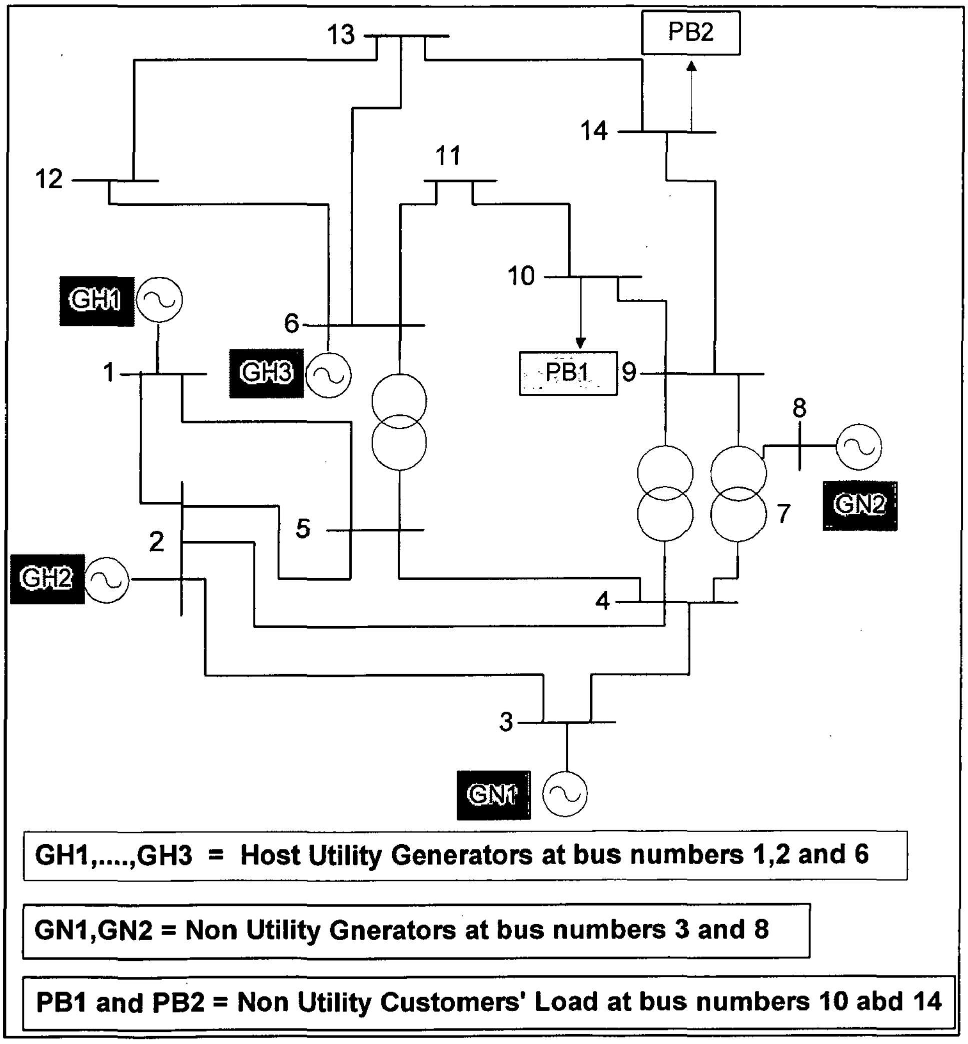

Figure 5.1: IEEE-14 Bus System

Fig. 5.1 shows the IEEE-14 bus system which is modified for the economic dispatch problem with the inclusion of the wheeling charges. Here, out of five generators, three generators are considered as of host utility generators connected at bus numbers 1, 2 and 6, while two generators connected at bus numbers 3 and 8 are considered at the non-utility generators. Non-utility generators' customers' loads are situated at bus numbers 10 and 14. At bus number 10, NUG customer active and reactive load is 30 MW and 17.4 MVAR, while at bus number 14, load is 40 MW and 23.4 MVAR. Other bus data, branch data, generator data and non-utility customer cost function are given in following tables.

TABLE 5.1 BUS DATA FOR IEEE-14 BUS SYSTEM

Bus No.	Bus Type	Pd in MW	Qd in MW	Gs	Bs	Area	Vm in p.u.	Va in rad	Base KV	Zone	Vmax in p.u.	Vmin in p.u.
1	3	0	0	0	0	1	1.06	0	132	1	1.06	0.94
2	2	21.7	12.7	0	0	1	1.045	-4.98	132	1	1.06	0.94
3	2	94.2	0	0	0	1	1.01	-12.72	132	1	1.06	0.94
4	1	47.8	-3.9	0	0	1	1.019	-10.33	132	1	1.06	0.94
5	1	7.6	1.6	0	0	1	1.02	-8.78	132	1	1.06	0.94
6	2	11.2	3.1	0	0	1	1.07	-14.22	66	1	1.06	0.94
7	2	0	0	0	0	1	1.062	-13.37	11	1	1.06	0.94
8	2	0	0	0	0	1	1.09	-13.36	66	1	1.06	0.94
9	1	29.5	0	0	19	1	1.056	-14.94	66	1	1.06	0.94
10	1	9	1.8	0	0	1	1.051	-15.1	66	1	1.06	0.94
11	1	3.5	1.8	0	0	1	1.057	-14.79	66	1	1.06	0.94
12	1	6.1	1.6	0	0	1	1.055	-15.07	66	1	1.06	0.94
13	2	13.5	5.8	0	0	1	1.05	-15.16	66	1	1.06	0.94
14	1	14.9	5	0	0	1	1.036	-16.04	132	1	1.06	0.94

TABLE 5.2 BRANCH DATA FOR IEEE-14 BUS SYSTEM

From Bus No.	To Bus No.	R in p.u.	X in p.u.	B in p.u.	Rate A in MVA	Rate B in MVA	Rate C in MVA	Tap Ratio	Angle	Branch Status
1	2	0.01938	0.05917	0.0528	95	0	0	0	0	1
1	5	0.05403	0.22304	0.0492	95	0	0	0	0	1
2	3	0.04699	0.19797	0.0438	60	0	0	0	0	1
2	4	0.05811	0.17632	0.034	60	0	0	0	0	1
2	5	0.05695	0.17388	0.0346	60	0	0	0	0	1
3	4	0.06701	0.17103	0.0128	60	0	0	0	0	1
4	5	0.01335	0.04211	0	60	0	0	0	0	1
4	7	0	0.20912	0	60	0	0	0.978	0	1
4	9	0	0.55618	0	60	0	0	0.969	0	1

TABLE 5.2 BRANCH DATA FOR IEEE-14 BUS SYSTEM CONTINUE....										
From Bus No.	To Bus No.	R in p.u.	X in p.u.	B in p.u.	Rate A in MVA	Rate B in MVA	Rate C in MVA	Tap Ratio	Angle	Branch Status
5	6	0	0.25202	0	60	0	0	0.932	0	1
6	11	0.09498	0.1989	0	60	0	0	0	0	1
6	12	0.12291	0.25581	0	60	0	0	0	0	1
6	13	0.06615	0.13027	0	60	0	0	0	0	1
7	8	0	0.17615	0	60	0	0	0	0	1
7	9	0	0.11001	0	60	0	0	0	0	1
9	10	0.03181	0.0845	0	60	0	0	0	0	1
9	14	0.12711	0.27038	0	60	0	0	0	0	1
10	11	0.08205	0.19207	0	60	0	0	0	0	1
12	13	0.22092	0.19988	0	60	0	0	0	0	1
13	14	0.17093	0.34802	0	60	0	0	0	0	1

TABLE 5.3 HOST UTILITY GENERATOR DATA FOR IEEE-14 BUS

Bus No.	Pg in MW	Qg in MVAR	Qmax in MVAR	Qmin in MVAR	Vg in p.u.	Base MVA	Status	Pmax in MW	Pmin in MW	cost coeff a	cost coeff b	cost coeff c
1	232.4	-16.9	10	0	1.06	100	1	332.4	0	0.04303	20	0
2	40	42.4	50	-40	1.045	100	1	140	0	0.25	20	0
6	0	12.2	24	-6	1.07	100	1	100	0	0.01	40	0

TABLE 5.4 NON UTILITY GENERATOR DATA FOR IEEE-14 BUS SYSTEM

Bus No.	Pg in MW	Qg in MVAR	Qmax in MVAR	Qmin in MVAR	Vg in p.u.	Base MVA	Status	Pmax in MW	Pmin in MW	cost coeff a	cost coeff b	cost coeff c
3	40	23.4	40	0	1.01	100	1	100	0	0.25	20	0
8	30	17.4	24	-4	1.09	100	1	100	0	0.04303	20	0

TABLE 5.5 HOST UTILITY CUSTOMER LOAD DATA FOR IEEE-14 BUS SYSTEM

Bus No.	Pdmax in MW	Pdmin in MW	Qdmax in MVAR	Qdmin in MVAR	Cost coeff a	Cost coeff b	Cost coeff c
2	26	17.4	15.3	10.1	0.053029	25	0
3	113.1	75.3	0	0	0.053029	25	0
4	57.4	38.3	-3	-4.8	0.02	40	0
5	9.1	6.1	2	1.2	0.3	20	0
6	13.5	8.9	3.8	2.5	0.3	25	0
9	35.4	23.6	0	0	0.3	25	0
10	10.8	7.2	2.2	1.4	0.02	50	0

TABLE 5.5 HOST UTILITY CUSTOMER LOAD DATA FOR IEEE-14 BUS CONTINUE							
Bus No.	Pdmax in MW	Pdmin in MW	Qdmax in MVAR	Qdmin in MVAR	Cost coeff a	Cost coeff b	Cost coeff c
11	4.2	2.8	2.2	1.4	0.02	50	0
12	8.3	4.8	1.9	1.3	0.02	50	0
13	16.2	10.8	7	4.6	0.3	25	0
14	17.9	11.9	6	4	0.3	25	0

TABLE 5.6 NON UTILITY CUSTOMER LOAD DATA FOR IEEE-14 BUS SYSTEM

Bus No.	Pdmax in MW	Pdmin in MW	Qdmax in MVAR	Qdmin in MVAR	Cost coeff a	Cost coeff b	Cost coeff c
10	33	25	30	10	0.35	25	0
14	44	36	35	12	0.06	25	0

5.2 IEEE-30 Bus System Data

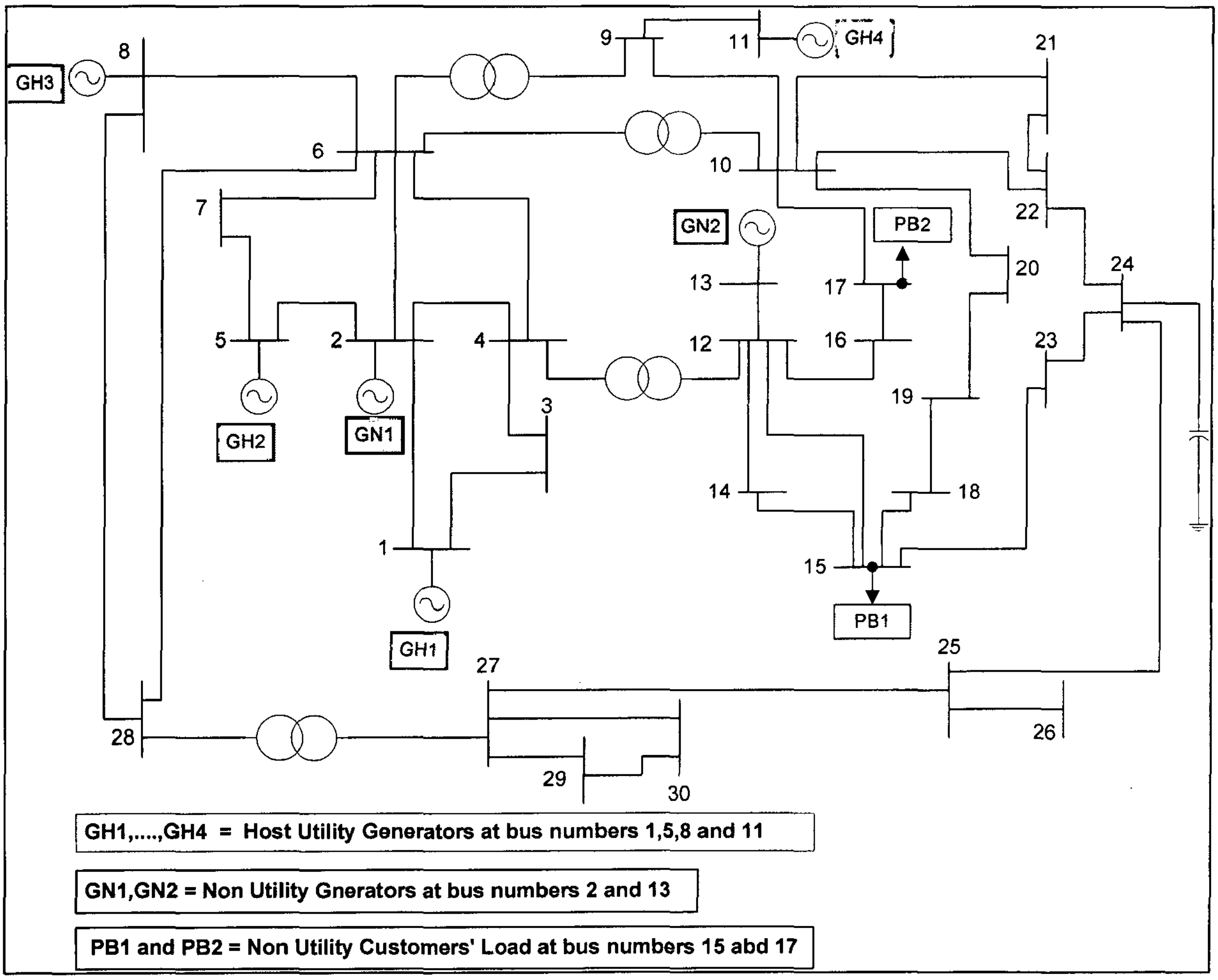

Figure 5.2: IEEE-30 Bus System

Fig. 5.2 shows the IEEE-30 bus system, which is modified for the economic dispatch problem with the inclusion of the wheeling charges in the same way that of IEEE-14 bus system case.. Here, out of six generators, four generators are considered as of host utility generators connected at bus numbers 1, 5, 8 and 11, while two generators connected at bus numbers 2 and 13 are considered at the non-utility generators. Non-utility generators' customers load is situated at bus numbers 15 and 17. At bus number 15, NUG customer active and reactive load is 18 MW and 10 MVAR, while at bus number 17, load is 10 MW and 5 MVAR. Other bus data, branch data, generator data and non-utility customer cost function are given in following tables.

TABLE 5.7 BUS DATA FOR IEEE-30 BUS SYSTEM

Bus No.	Bus Type	Pd in MW	Qd in MW	Gs	Bs	Area	Vm in p.u.	Va in rad	Base KV	Zone	Vmax in p.u.	Vmin in p.u.
1	3	0	0	0	0	1	1.06	0	132	1	1.06	0.94
2	2	16.7	7.7	0	0	1	1.043	-5.48	132	1	1.06	0.94
3	1	2.4	1.2	0	0	1	1.021	-7.96	132	1	1.06	0.94
4	1	7.6	1.6	0	0	1	1.012	-9.62	132	1	1.06	0.94
5	2	74.2	9	0	0	1	1.01	-14.37	132	1	1.06	0.94
6	1	0	0	0	0	1	1.01	-11.34	132	1	1.06	0.94
7	1	17.8	5.9	0	0	1	1.002	-13.12	132	1	1.06	0.94
8	2	25	15	0	0	1	1.01	-12.1	132	1	1.06	0.94
9	1	0	0	0	0	1	1.051	-14.38	1	1	1.06	0.94
10	1	5.8	2	0	19	1	1.045	-15.97	33	1	1.06	0.94
11	2	0	0	0	0	1	1.082	-14.39	11	1	1.06	0.94
12	1	11.2	2.5	0	0	1	1.057	-15.24	33	1	1.06	0.94
13	2	0	0	0	0	1	1.071	-15.24	11	1	1.06	0.94
14	1	6.2	1.6	0	0	1	1.042	-16.13	33	1	1.06	0.94
15	1	8.2	2.5	0	0	1	1.038	-16.22	33	1	1.06	0.94
16	1	3.5	1.8	0	0	1	1.045	-15.83	33	1	1.06	0.94
17	1	9	3.8	0	0	1	1.04	-16.14	33	1	1.06	0.94
18	1	3.2	0.9	0	0	1	1.028	-16.82	33	1	1.06	0.94
19	1	9.5	3.4	0	0	1	1.026	-17	33	1	1.06	0.94
20	1	2.2	0.7	0	0	1	1.03	-16.8	33	1	1.06	0.94
21	1	12.5	7.2	0	0	1	1.033	-16.42	33	1	1.06	0.94
22	1	0	0	0	0	1	1.033	-16.41	33	1	1.06	0.94
23	1	3.2	1.6	0	0	1	1.027	-16.61	33	1	1.06	0.94
24	1	8.7	2.7	0	4.3	1	1.021	-16.78	33	1	1.06	0.94
25	1	0	0	0	0	1	1.017	-16.35	33	1	1.06	0.94
26	1	3.5	2.3	0	0	1	1	-16.77	33	1	1.06	0.94
27	1	0	0	0	0	1	1.023	-15.82	33	1	1.06	0.94

TABLE 5.7 BUS DATA FOR IEEE-30 BUS SYSTEM CONTINUE												
Bus No.	Bus Type	Pd in MW	Qd in MW	Gs	Bs	Area	Vm in p.u.	Va in rad	Base KV	Zone	Vmax in p.u.	Vmin in p.u.
28	1	0	0	0	0	1	1.007	-11.97	132	1	1.06	0.94
29	1	2.4	0.9	0	0	1	1.003	-17.06	33	1	1.06	0.94
30	1	10.6	1.9	0	0	1	0.992	-17.94	33	1	1.06	0.94

TABLE 5.8 BRANCH DATA FOR IEEE-30 BUS SYSTEM

From Bus No.	To Bus No.	R in p.u.	X in p.u.	B in p.u.	Rate A in MVA	Rate B in MVA	Rate C in MVA	Tap Ratio	Angle	Branch Status
1	2	0.0192	0.0575	0.0528	99	0	0	0	0	1
1	3	0.0452	0.1652	0.0408	99	0	0	0	0	1
2	4	0.057	0.1737	0.0368	99	0	0	0	0	1
3	4	0.0132	0.0379	0.0084	99	0	0	0	0	1
2	5	0.0472	0.1983	0.0418	99	0	0	0	0	1
2	6	0.0581	0.1763	0.0374	99	0	0	0	0	1
4	6	0.0119	0.0414	0.009	99	0	0	0	0	1
5	7	0.046	0.116	0.0204	99	0	0	0	0	1
6	7	0.0267	0.082	0.017	99	0	0	0	0	1
6	8	0.012	0.042	0.009	99	0	0	0	0	1
6	9	0	0.208	0	99	0	0	0.978	0	1
6	10	0	0.556	0	99	0	0	0.969	0	1
9	11	0	0.208	0	99	0	0	0	0	1
9	10	0	0.11	0	99	0	0	0	0	1
4	12	0	0.256	0	99	0	0	0.932	0	1
12	13	0	0.14	0	99	0	0	0	0	1
12	14	0.1231	0.2559	0	99	0	0	0	0	1
12	15	0.0662	0.1304	0	99	0	0	0	0	1
12	16	0.0945	0.1987	0	99	0	0	0	0	1
14	15	0.221	0.1997	0	99	0	0	0	0	1
16	17	0.0524	0.1923	0	99	0	0	0	0	1
15	18	0.1073	0.2185	0	99	0	0	0	0	1
18	19	0.0639	0.1292	0	99	0	0	0	0	1
19	20	0.034	0.068	0	99	0	0	0	0	1
10	20	0.0936	0.209	0	99	0	0	0	0	1
10	17	0.0324	0.0845	0	99	0	0	0	0	1
10	21	0.0348	0.0749	0	99	0	0	0	0	1
10	22	0.0727	0.1499	0	99	0	0	0	0	1

TABLE 5.8 BRANCH DATA FOR IEEE-30 BUS SYSTEM CONTINUE										
From Bus No.	To Bus No.	R in p.u.	X in p.u.	B in p.u.	Rate A in MVA	Rate B in MVA	Rate C in MVA	Tap Ratio	Angle	Branch Status
21	22	0.0116	0.0236	0	99	0	0	0	0	1
15	23	0.1	0.202	0	99	0	0	0	0	1
22	24	0.115	0.179	0	99	0	0	0	0	1
23	24	0.132	0.27	0	99	0	0	0	0	1
24	25	0.1885	0.3292	0	99	0	0	0	0	1
25	26	0.2544	0.38	0	99	0	0	0	0	1
25	27	0.1093	0.2087	0	99	0	0	0	0	1
28	27	0	0.396	0	99	0	0	0.968	0	1
27	29	0.2198	0.4153	0	99	0	0	0	0	1
27	30	0.3202	0.6027	0	99	0	0	0	0	1
29	30	0.2399	0.4533	0	99	0	0	0	0	1
8	28	0.0636	0.2	0.0428	99	0	0	0	0	1
6	28	0.0169	0.0599	0.013	99	0	0	0	0	1

TABLE 5.9 HOST UTILITY GENERATOR DATA FOR IEEE-30 BUS SYSTEM

Bus No.	Pg in MW	Qg in MVAR	Qmax in MVAR	Qmin in MVAR	Vg in p.u.	Base MVA	Status	Pmax in MW	Pmin in MW	cost coeff a	cost coeff b	cost coeff c
1	260.2	-16.1	10	0	1.06	100	1	360.2	0	0.04	20	0
5	0	37	40	-40	1.01	100	1	100	0	0.01	40	0
8	0	37.3	40	-10	1.01	100	1	100	0	0.01	40	0
11	0	16.2	24	-6	1.082	100	1	100	0	0.01	40	0

TABLE 5.10 NON UTILITY GENERATOR DATA FOR IEEE-30 BUS SYSTEM

Bus No.	Pg in MW	Qg in MVAR	Qmax in MVAR	Qmin in MVAR	Vg in p.u.	Base MVA	Status	Pmax in MW	Pmin in MW	cost coeff a	cost coeff b	cost coeff c
2	18	10	50	-40	1.05	100	1	140	0	0.25	20	0
13	9	5	24	-6	1.07	100	1	100	0	0.25	20	0

TABLE 5.11 HOST UTILITY CUSTOMER LOAD DATA FOR IEEE-30 BUS SYSTEM

Bus No.	Pdmax in MW	Pdmin in MW	Qdmax in MVAR	Qdmin in MVAR	Cost coeff a	Cost coeff b	Cost coeff c
2	20	13.3	9.25	6.2	0.04843	25	0
3	2.9	1.9	1.45	0.95	0.04843	25	0
4	9.1	6.1	1.9	1.3	0.04843	25	0

TABLE 5.11 HOST UTILITY CUSTOMER LOAD DATA FOR IEEE-30 BUS CONTINUE							
Bus No.	Pdmax in MW	Pdmin in MW	Qdmax in MVAR	Qdmin in MVAR	Cost Coeff a	Cost Coeff b	Cost Coeff c
5	89	59.4	10.8	7.2	0.02	45	0
7	21.4	14.3	7.1	4.8	0.04843	25	0
8	30	20	18	12	0.04843	25	0
10	7	4.7	2.2	1.8	0.04843	25	0
12	13.5	9	3	2	0.04843	25	0
14	7.45	4.95	1.9	1.3	0.04843	25	0
15	9.85	6.55	3	2	0.04843	25	0
16	4.2	2.8	2.15	1.45	0.04843	25	0
17	10.8	7.2	4.55	3.05	0.02	45	0
18	3.85	2.55	1.08	0.72	0.04843	25	0
19	11.4	7.6	4.1	2.7	0.04843	25	0
20	2.65	1.75	0.85	0.55	0.04843	25	0
21	15	10	8.65	5.75	0.04843	25	0
23	3.85	2.55	1.9	1.3	0.04843	25	0
24	10.45	6.95	3.25	2.15	0.04843	25	0
26	4.2	2.8	2.75	1.85	0.04843	25	0
29	2.9	1.9	10.8	0.72	0.02	45	0
30	12.7	8.5	2.3	1.5	0.04843	25	0

TABLE 5.12: NON UTILITY CUSTOMER LOAD DATA FOR IEEE-30 BUS SYSTEM

Bus No.	Pdmax in MW	Pdmin in MW	Qdmax in MVAR	Qdmin in MVAR	Cost coeff a	Cost coeff b	Cost coeff c
15	20	16	15	5	0.28	23	0
17	10	8	12	2	0.28	23	0

These data sets of IEEE-14 bus system and IEEE-30 bus systems are used for the solution of the problem described in the section 3.5, 3.6 and 4.5, i.e., for economic dispatch including wheeling charges, maximizing social welfare including wheeling charges, as well as for maximizing social welfare including wheeling charges and considering transmission congestion.

5.3 Results for Economic Dispatch Including Wheeling Charges

The problem of economic dispatch with the inclusion of wheeling charges, described in the section 3.5, is solved with SQP algorithm given in APENDIX-A. The results obtained for both IEEE-14 bys system and IEEE-30 bus system are tabulated as follows.

5.3.1 Results for Ieee-14 Bus System

TABLE 5.13: BUS POWER, VOLTAGE AND ANGLES

Bus No.	Host utility		Non-utility				Bus Marginal price in mu/hr
	Pd in MW	Qd in MVAR	Pb in MW	Qb in MVAR	V in p.u.	δ in rad	
1	0	0	0	0	1.0407	0	26.006
2	21.7	12.7	0	0	1.0417	0.19862	25.931
3	94.2	0	0	0	1.0565	2.7051	25.236
4	47.8	-3.9	0	0	1.0291	-0.39996	26.222
5	7.6	1.6	0	0	1.0263	-0.59666	26.236
6	11.2	3.1	0	0	1.06	-3.8588	26.109
7	0	0	0	0	1.0502	-2.5142	26.303
8	0	0	0	0	1.06	-1.3716	26.301
9	29.5	0	0	0	1.0441	-4.3596	26.353
10	9.0	1.8	30	17.4	1.0269	-5.1242	26.733
11	3.5	1.8	0	0	1.0427	-4.4795	26.439
12	6.1	1.6	0	0	1.0511	-4.2637	26.247
13	13.5	5.8	0	0	1.0396	-4.4717	26.581
14	14.9	5.0	40	23.4	0.97468	-6.881	28.187
Total	259.0	29.5	70.0	40.8			

TABLE 5.14: BRANCH FLOW

Branch No.	From Bus	To Bus	From Bus injection		To Bus injection		Losses	
			P in MW	Q in MVAR	P in MW	Q in MVAR	P in MW	Q in MVAR
1	1	2	92.75	-2.5668	-91.015	-3.5654	1.735	5.30
2	1	5	50.77	6.3304	-49.746	-12.59	1.027	4.24
3	2	3	39.44	1.8534	-37.335	-2.2658	2.111	8.89
4	2	4	45.86	1.2292	-45.022	-5.8893	0.833	2.53
5	2	5	32.78	3.6088	-32.439	-9.8809	0.344	1.05
6	3	4	3.976	5.4575	-2.4923	-4.3491	1.483	3.79
7	4	5	-55.34	12.882	55.92	-11.056	0.579	1.89
8	4	7	33.29	-2.3091	-33.296	3.4301	0	1.12
9	4	9	21.759	3.5657	-21.759	-2.229	0	1.34
10	5	6	18.665	31.928	-18.665	-29.26	0	2.67
11	6	11	30.24	2.6309	-29.751	-1.607	0.489	1.02
12	6	12	13.447	3.3244	-13.325	-3.0706	0.122	0.25
13	6	13	39.002	14.204	-38.451	-13.119	0.551	1.09
14	7	8	-12.60	-5.717	12.602	6.0228	0	0.31
15	7	9	45.898	2.2869	-45.898	-1.0086	0	1.28
16	9	10	13.307	20.773	-13.08	-20.168	0.228	0.60
17	9	14	24.849	23.965	-23.806	-21.746	1.043	2.22
18	10	11	-25.92	0.96839	26.251	-0.19303	0.331	0.78

TABLE 5.14: BRANCH FLOW CONTINUE								
Branch No.			From Bus injection		To Bus injection		Losses	
	From Bus	To Bus	P in MW	Q in MVAR	P in MW		From Bus	To Bus
19	12	13	7.2249	1.4706	-7.1658	-1.4172	0.059	0.05
20	13	14	32.116	8.7361	-31.094	-6.654	1.023	2.08
						Shunt (injection)	-	41.5
						Branch charging(injection)	-	48.4
						Total	11.958	42.43

TABLE 5.15: EVALUATED COSTS

Host Utility Generation			Non-utility Generation		
Bus No.	Pg in MW	Pg Cost in mu/hr	Bus No.	Pg in MW	Pg Cost in mu/hr
1	143.52	3756.8	3	60.841	1376.1
2	48.768	1570	8	12.602	291.73
6	75.224	3065.5			
Total	267.512	8392.328	Total	73.443	1667.821
				Total wheeling charges	749.469
				Wheeling charges due to the customer at bus no. 10	321.201
				Wheeling charges due to the customer at bus no. 14	428.268

5.3.2 Results for Ieee-30 Bus System

TABLE 5.16: BUS POWER, VOLTAGE AND ANGLES

Bus No.	Host utility		Non-utility				Bus marginal price in mu/hr
	Pd in MW	Qd in MVAR	Pb in MW	Qb in MVAR	V in p.u.	δ in rad	
1	0	0	0	0	0.951	0	26.833
2	16.7	7.7	0	0	0.948	0.1808	26.8
3	2.4	1.2	0	0	0.953	-0.3545	26.908
4	7.6	1.6	0	0	0.953	-0.4210	26.93
5	74.2	9	0	0	0.957	-0.2454	26.863
6	0	0	0	0	0.958	-0.5879	26.955
7	17.8	5.9	0	0	0.958	-0.4676	26.921
8	25	15	0	0	0.959	-0.6157	26.955
9	0	0	0	0	0.996	-1.2272	26.991
10	5.8	2	0	0	1.004	-1.5571	27.01
11	0	0	0	0	0.996	-1.2272	26.991
12	11.2	2.5	0	0	0.997	-0.9853	26.884
13	0	0	0	0	0.988	0.13644	26.888
14	6.2	1.6	0	0	0.992	-1.4094	27.016
15	8.2	2.5	18.0	10.0	0.984	-1.7061	27.33

TABLE 5.16: BUS POWER, VOLTAGE AND ANGLES CONTINUE							
Bus No.	Host utility		Non-utility				Bus marginal price in mu/hr
	Pd in MW	Qd in MVAR	Pb in MW	Qb in MVAR	V in p.u.	δ in rad	
16	3.5	1.8	0	0	0.996	-1.3799	27.034
17	9	3.8	09	5.0	0.996	-1.738	27.114
18	3.2	0.9	0	0	0.991	-1.6573	27.214
19	9.5	3.4	0	0	0.995	-1.6294	27.146
20	2.2	0.7	0	0	0.997	-1.6153	27.11
21	12.5	7.2	0	0	1.004	-1.5686	27.021
22	0	0	0	0	1.004	-1.5721	27.025
23	3.2	1.6	0	0	0.992	-1.667	27.218
24	8.7	2.7	0	0	1.002	-1.6129	27.074
25	0	0	0	0	0.999	-1.2088	26.965
26	3.5	2.3	0	0	0.999	-1.2088	26.965
27	0	0	0	0	0.998	-0.9603	26.903
28	0	0	0	0	0.960	-0.6648	26.96
29	2.4	0.9	0	0	0.998	-0.9603	26.903
30	10.6	1.9	0	0	0.998	-0.9603	26.903
Total	253.4	29.5	77.0	40.8			

TABLE 5.17: BRANCH FLOW

Branch No.			From Bus injection		To Bus injection		Losses	
	From Bus	To Bus	P in MW	Q in MVAR	P in MW	Q in MVAR	P in MW	Q in MVAR
1	1	2	96.20	5.84	-94.81	-11.83	1.695	5.08
2	1	3	53.09	-0.26	-52.04	-4.07	1.044	3.81
3	2	4	28.72	-5.85	-28.37	-0.33	0.347	1.06
4	3	4	49.64	2.87	-49.37	-3.73	0.276	0.79
5	2	5	27.53	-9.40	-27.37	2.38	0.296	1.24
6	2	6	35.17	-11.628	-34.615	5.9245	0.552	1.67
7	4	6	29.60	-25.326	-29.484	23.975	0.119	0.41
8	5	7	12.29	-1.2841	-12.239	-2.5988	0.053	0.13
9	6	7	5.578	0.0139	-5.5613	-3.3012	0.017	0.05
10	6	8	4.28	-16.22	-4.2597	14.517	0.021	0.07
11	6	9	22.64	-7.235	-22.643	7.9852	0	0.75
12	6	10	16.22	-1.491	-16.217	2.4537	0	0.96
13	9	11	-15.63	4.439	15.627	-3.9389	0	0.50
14	9	10	38.27	-12.42	-38.270	13.635	0	1.21
15	4	12	40.534	27.78	-40.536	-23.983	0	3.80
16	12	13	-13.78	6.324	13.777	-5.9999	0	0.32
17	12	14	10.16	2.874	-10.090	-2.7231	0.073	0.15
18	12	15	26.42	10.22	-26.167	-9.7287	0.252	0.50

TABLE 5.17: BRANCH FLOW

Branch No.	From Bus	To Bus	From Bus injection		To Bus injection		Losses	
			P in MW	Q in MVAR	P in MW	Q in MVAR	P in MW	Q in MVAR
19	12	16	6.53	2.060	-6.5029	-2.0011	0.028	0.05
20	14	15	3.89	1.123	-3.8650	-1.1012	0.024	0.02
21	16	17	3.003	0.201	-2.9970	-0.17946	0.006	0.02
22	15	18	2.468	-0.333	-2.4390	0.39287	0.03	0.06
23	18	19	-0.761	-1.2929	0.76763	1.3063	0.007	0.01
24	19	20	-10.27	-4.7064	10.296	4.7635	0.029	0.06
25	10	20	12.616	5.7301	-12.496	-5.4635	0.119	0.27
26	10	17	15.052	8.7496	-15.003	-8.6205	0.049	0.13
27	10	21	13.881	5.4062	-13.8150	-5.2638	0.066	0.14
28	10	22	7.138	2.2594	-7.1035	-2.1885	0.034	0.07
29	21	22	1.315	-1.9362	-1.3144	1.93739	0.001	0
30	15	23	1.3636	-1.3375	-1.3390	1.38721	0.025	0.05
31	22	24	8.4179	0.25109	-8.3527	-0.14954	0.065	0.10
32	23	24	-1.861	-2.98721	1.8778	3.021642	0.017	0.03
33	24	25	-2.225	3.37423	2.2401	-3.34803	0.015	0.03
34	25	26	3.5432	2.36461	-3.5	-2.30	0.043	0.06
35	25	27	-5.783	0.98342	5.8086	-0.93516	0.025	0.05
36	28	27	19.082	3.6118	-19.082	-2.3799	0	1.23
37	27	29	6.1861	1.6613	-6.1025	-1.50346	0.084	0.16
38	27	30	7.0871	1.6537	-6.9299	-1.3579	0.157	0.30
39	29	30	3.702	0.6034	-3.6700	-0.5421	0.032	0.06
40	8	28	3.7496	-2.2629	-3.7383	-6.14766	0.011	0.04
41	6	28	15.379	-4.96708	-15.343	2.5358	0.036	0.13
Shunt (injection)							-	49.2
Branch charging(injection)							-	65.1
Total							5.646	25.60

TABLE 5.18: EVALUATED COSTS

Host Utility Generation			Non-utility Generation		
Bus No.	Pg in MW	Pg Cost in mu/hr	Bus No.	Pg in MW	Pg Cost in mu/hr
1	149.292	3842.40	2	13.600	318.25
5	59.262	2405.58	13	13.776	322.98
8	24.49	985.59			
11	15.627	627.50			
Total	248.669	7861.079	Total	27.378	641.223
Total wheeling charges					1460.016
Wheeling charges due to the customer at bus no. 15					973.3438
Wheeling charges due to the customer at bus no. 17					486.6719

5.4 Results for Maximizing Social Benefit Including Wheeling Charges

5.4.1 *Results for Ieee-14 Bus System*

TABLE 5.19: BUS POWER, VOLTAGE AND ANGLES

Bus No.	Host utility		Non-utility				Bus marginal price in mu/hr
	Pd in MW	Qd in MVAR	Pb in MW	Qb in MVAR	V in p.u.	δ in rad	
1	0	0	0	0	1.0368	0	27.382
2	17.4	10.1	0	0	1.0377	0.1205	26.845
3	75.3	0	0	0	1.0523	1.5786	31.103
4	38.3	-4.8	0	0	1.0257	-0.1084	26.476
5	6.1	1.2	0	0	1.0224	-0.3038	23.695
6	8.9	2.5	0	0	1.048	-2.905	28.133
7	0	0	0	0	1.0394	-0.8157	27.953
8	0	0	0	0	1.0466	1.6758	27.953
9	23.6	0	0	0	1.0311	-2.7734	28.62
10	7.2	1.4	25	22.003	1.0122	-3.4132	28.857
11	2.8	1.4	0	0	1.0295	-3.1408	28.666
12	4.8	1.3	0	0	1.0387	-3.2257	29.165
13	10.8	4.6	0	0	1.0274	-3.3387	29.309
14	11.9	4	36.033	25.706	0.96078	-5.1106	30.091
Total	207.0	21.7	61.033	47.709			

TABLE 5.20: BRANCH FLOW

Branch No.	From Bus	To Bus	From Bus injection		To Bus injection		Losses	
			P in MW	Q in MVAR	P in MW	Q in MVAR	P in MW	Q in MVAR
1	1	2	91.0	-7.147	-89.413	0.5783	1.587	4.85
2	1	5	57.99	7.147	-56.507	-11.49	1.480	6.11
3	2	3	44.06	-3.267	-42.415	0.877	1.647	6.94
4	2	4	51.01	1.0253	-49.798	-4.523	1.214	3.68
5	2	5	42.36	4.791	-41.639	-9.877	0.725	2.21
6	3	4	3.926	8.425	-3.3875	-9.733	0.539	1.37
7	4	5	-37.19	18.298	37.522	-17.26	0.330	1.04
8	4	7	29.56	-2.353	-29.56	3.6163	0	1.26
9	4	9	22.52	3.1103	-22.517	-1.610	0	1.5
10	5	6	54.52	37.427	-54.524	-32.58	0	4.85
11	6	11	10.80	5.8175	-10.71	-5.619	0.095	0.20
12	6	12	9.401	3.7026	-9.3409	-3.577	0.06	0.13
13	6	13	25.42	14.558	-25.146	-14.02	0.272	0.54
14	7	8	-26.85	-3.6945	26.847	4.892	0	1.20

TABLE 5.20: BRANCH FLOW CONTINUE								
Branch No.			From Bus injection		To Bus injection		Losses	
	From Bus	To Bus	P in MW	Q in MVAR	P in MW	Q in MVAR	P in MW	Q in MVAR
15	7	9	56.41	0.0782	-56.407	1.721	0	1.80
16	9	10	24.56	19.884	-24.36	-19.348	0.202	0.54
17	9	14	30.76	21.555	-29.719	-19.33	1.043	2.22
18	10	11	-7.84	-4.055	7.9098	4.2193	0.070	00.16
19	12	13	4.541	2.2767	-4.5053	-2.245	0.036	0.03
20	13	14	18.85	11.666	-18.215	-10.37	0.637	1.30
Shunt (injection)							-	41.6
Branch charging(injection)							-	48.4
Total							9.937	41.93

TABLE 5.21-A: EVALUATED COSTS FOR HOST UTILITY

Bus No.	Pg in MW	Pg cost in mu/hr	Bus No.	Pd in MW	Pd Cost in mu/hr
1	148.99	3934.9	2	17.4	451.06
2	65.43	2378.6	3	75.3	2183.2
6	0	0	4	38.3	1561.3
			5	6.1	133.16
			6	8.9	246.26
			9	23.6	757.09
			10	7.2	361.04
			11	2.8	140.16
			12	4.8	240.46
			13	10.8	304.99
			14	11.9	339.98
Total	214.42	6313.5	Total	207.1	6718.7

TABLE 5.21-B: EVALUATED COSTS FOR NON UTILITY

Bus No.	Pg in MW	Pg cost in mu/hr	Bus No.	Pd in MW	Pd Cost in mu/hr
3	36.81	1075.0	10	25.0	843.75
8	26.85	567.94	14	36.03	978.74
Total	63.65	1642.93	Total	61.03	1822.5

TABLE 5.22: TOTAL EVALUATED COSTS IN MU/HR

	Host Utility	Non Utility
Generation	6313.52	1642.93
Customer Cost	6718.72	1822.48
Social Benefit value	405.2	179.55

TABLE 5.22: TOTAL EVALUATED COSTS IN MU/HR CONTINUE	
Wheeling Charges	2005.78
Wheeling cost due to customer load at bus 10	821.5952
Wheeling cost due to customer load at bus 14	1184.1926

5.4.2 Results for Ieee-30 Bus System

TABLE 5.23: BUS POWER, VOLTAGE AND ANGLES

Bus No.	Host utility		Non-utility				Bus marginal price in mu/hr
	Pd in MW	Qd in MVAR	Pb in MW	Qb in MVAR	V in p.u.	δ in rad	
1	0	0	0	0	0.958	0	29.354
2	13.3	6.2	0	0	0.955	0.3052	28.778
3	1.9	0.95	0	0	0.957	-0.7155	17.056
4	6.1	1.3	0	0	0.956	-0.8645	21.182
5	59.4	7.2	0	0	0.962	-0.3957	26.288
6	0	0	0	0	0.961	-1.0075	23.439
7	14.3	4.8	0	0	0.962	-0.7748	24.775
8	20	12	0	0	0.962	-1.0418	23.567
9	0	0	0	0	0.997	-2.0566	23.193
10	4.7	1.8	0	0	1.005	-2.5992	23.061
11	0	0	0	0	0.997	-2.0566	23.193
12	9	2	0	0	0.999	-2.8451	22.113
13	0	0	0	0	0.995	-2.8446	22.113
14	4.95	1.3	0	0	0.992	-3.1983	22.523
15	6.55	2	19.84	11.23	0.984	-3.4010	22.704
16	2.8	1.45	0	0	0.997	-2.8699	22.644
17	7.2	3.05	9.83	8.29	0.995	-2.9078	23.002
18	2.55	0.72	0	0	0.991	-3.1197	23.103
19	7.6	2.7	0	0	0.996	-2.9559	23.265
20	1.75	0.55	0	0	0.998	-2.8707	23.227
21	10	5.75	0	0	1.005	-2.6284	23.210
22	0	0	0	0	1.005	-2.6376	23.206
23	2.55	1.3	0	0	0.992	-3.1222	23.073
24	6.95	2.15	0	0	1.004	-2.7547	23.408
25	0	0	0	0	1.002	-2.10	23.524
26	2.8	1.85	0	0	1.003	-2.10	23.877
27	0	0	0	0	1.001	-1.6941	23.45
28	0	0	0	0	0.963	-1.1219	23.543
29	1.9	0.72	0	0	1.002	-1.6942	23.990
30	8.5	1.5	0	0	1.002	-1.6942	24.363
Total	194.8	61.29	29.67	19.52			

TABLE 5.24: BRANCH FLOW

Branch No.	From	To	From Bus injection		To Bus injection		Losses	
			P in MW	Q in MVAR	P in MW	Q in MVAR	P in MW	Q in MVAR
1	1	2	92.44	-1.33	-90.74	-4.19	1.072	5.10
2	1	3	57.39	1.33	-56.29	-5.48	1.097	4.01
3	2	4	35.35	-1.86	-34.92	-4.07	0.435	1.32
4	3	4	54.39	4.53	-54.09	-5.32	0.298	0.86
5	2	5	28.89	-23.08	-28.52	16.19	0.369	1.55
6	2	6	43.41	-5.92	-42.70	0.69	0.708	2.15
7	4	6	36.48	-17.72	-36.32	16.52	0.160	0.55
8	5	7	19.70	16.28	-19.42	-19.69	0.275	0.69
9	6	7	-5.04	-18.00	5.12	14.89	0.077	0.24
10	6	8	20.58	13.17	-20.50	-14.64	0.082	0.29
11	6	9	29.75	-7.86	-29.75	8.98	0	1.12
12	6	10	17.22	-2.30	-17.22	3.23	0	0.93
13	9	11	0	6.07	0	-6.0	0	0.07
14	9	10	29.75	-15.05	-29.75	15.71	0	0.65
15	4	12	46.44	25.80	-46.44	-22.30	0	3.51
16	12	13	-0.01	2.60	0.006	-2.59	0	0.01
17	12	14	8.86	2.95	-8.80	-2.83	0.055	0.11
18	12	15	23.55	11.18	-23.34	-10.76	0.214	0.42
19	12	16	5.024	3.57	-4.99	-3.52	0.025	0.05
20	14	15	3.86	1.53	-3.84	-1.51	0.024	0.02
21	16	17	2.20	2.07	-2.20	-2.06	0.03	0.01
22	15	18	1.06	-0.03	-1.03	0.11	0.035	0.07
23	18	19	-1.52	-0.83	1.53	0.85	0.011	0.02
24	19	20	-9.13	-3.55	9.15	3.58	0.017	0.07
25	10	20	10.97	4.29	-10.90	-4.13	0.069	0.15
26	10	17	14.89	9.43	-14.83	-9.28	0.057	0.15
27	10	21	10.86	4.05	-10.82	-3.97	0.038	0.08
28	10	22	5.55	1.64	-5.53	-1.60	0.019	0.04
29	21	22	0.82	-1.78	-0.82	1.78	0	0
30	15	23	-0.27	-0.93	0.31	0.99	0.031	0.06
31	22	24	6.35	-0.19	-6.32	0.23	0.031	0.05
32	23	24	-2.86	-2.30	2.88	2.34	0.026	0.05
33	24	25	-3.51	4.24	3.54	-4.19	0.030	0.05
34	25	26	2.83	1.89	-2.80	-1.85	0.028	0.04
35	25	27	-6.37	2.30	6.40	-2.25	0.026	0.05
36	28	27	16.97	1.12	-16.97	-0.30	0	0.82
37	27	29	4.92	1.28	-4.87	-1.18	0.053	0.10
38	27	30	5.65	1.27	-5.55	-1.08	0.10	0.19
39	29	30	2.97	0.46	-2.95	-0.42	0.021	0.04
40	8	28	0.5	-7.36	-0.49	-0.94	0.005	0.02

TABLE 5.24: BRANCH FLOW CONTINUE								
Branch No.	From	To	From Bus injection		To Bus injection		Losses	
			P in MW	Q in MVAR	P in MW	Q in MVAR	P in MW	Q in MVAR
41	6	28	16.51	-2.22	-16.47	-0.18	0.039	0.14
Shunt (injection)							-	49.1
Branch charging(injection)							-	65.3
Total							6.157	25.84

TABLE 5.25-A: EVALUATED COSTS FOR HOST UTILITY

Bus No.	Pg in MW	Pg cost in mu/hr	Bus No.	Pd in MW	Pd Cost in mu/hr
1	149.8	3859.39	2	13.3	341.07
5	50.57	2048.39	3	1.9	47.67
8	0	0	4	6.1	154.3
11	0	0	5	59.4	2743.6
			7	14.3	367.40
			8	20.0	519.37
			10	4.7	118.57
			12	9.0	228.92
			14	4.95	124.94
			15	6.55	165.83
			16	2.8	70.38
			17	7.2	325.04
			18	2.55	64.06
			19	7.6	192.80
			20	1.75	43.90
			21	10	254.84
			23	2.55	64.06
			24	6.95	176.09
			26	2.8	70.38
			29	1.9	85.57
			30	8.5	216.0
Total	200.4	5907.8	Total	194.8	6374.8

TABLE 5.25-B: EVALUATED COSTS FOR NON UTILITY

Bus No.	Pg in MW	Pg cost in mu/hr	Bus No.	Pb in MW	Pb Cost in mu/hr
2	30.22	832.6	15	19.84	566.53
13	0.006	0.128	17	9.827	253.06
Tot	30.23	832.7	Tot	29.66	819.6

TABLE 5.26: TOTAL EVALUATED COSTS IN MU/HR

	Host Utility	Non Utility
Generation	5907.78	832.71
Customer Cost	6374.77	819.6
Social Benefit value	466.98	-13.11
Total wheeling Charges		972.19
Wheeling charges due to the customer at bus no. 15		650.1522
Wheeling charges due to the customer at bus no. 17		322.0360

Note:

In section 5.3 results of economic dispatch including of wheeling charges are tabulated where as in section 5.4 results for maximizing social welfare including of wheeling charges are tabulated.

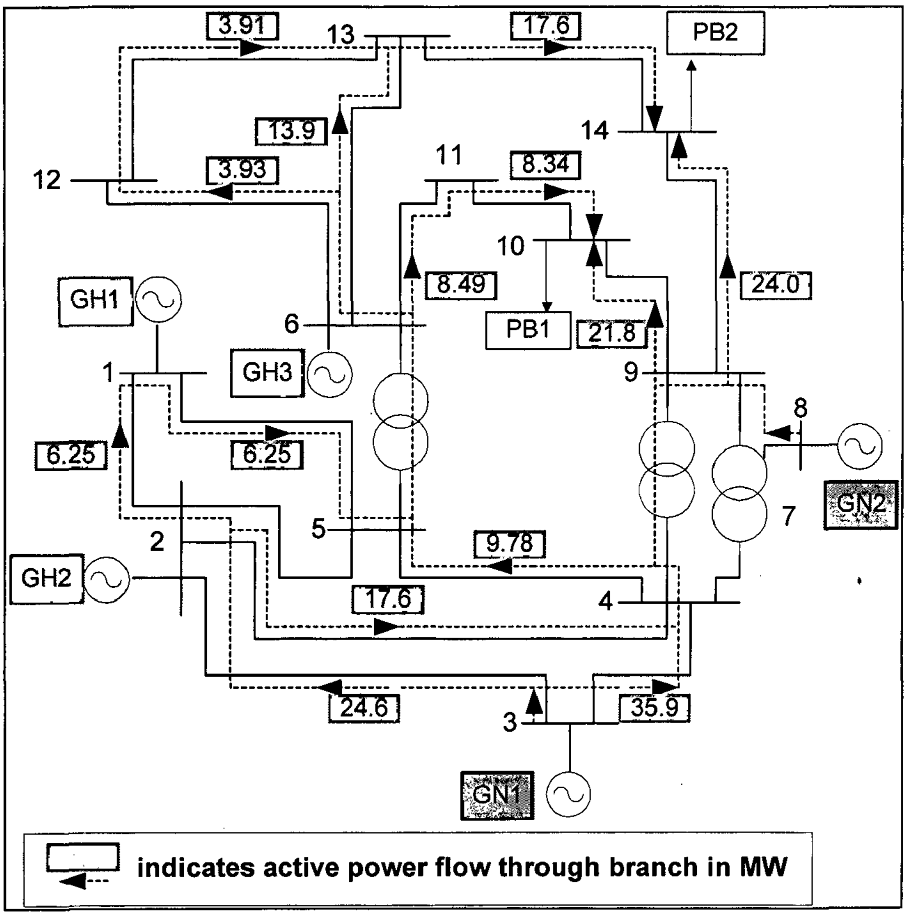

Figure 5.3: Active Power Flow Increase of IEEE-14 Bus System for Economic Dispatch Including Wheeling Charges

Fig. 5.3 shows the increase in the branch power flow due to the power transaction between NUG and its customer for the case of Economic Dispatch including wheeling charges of IEEE-14 bus system. For the case of maximizing social welfare including wheeling charges, Fig. 5.4 shows the increase in the active power flow through the branch.

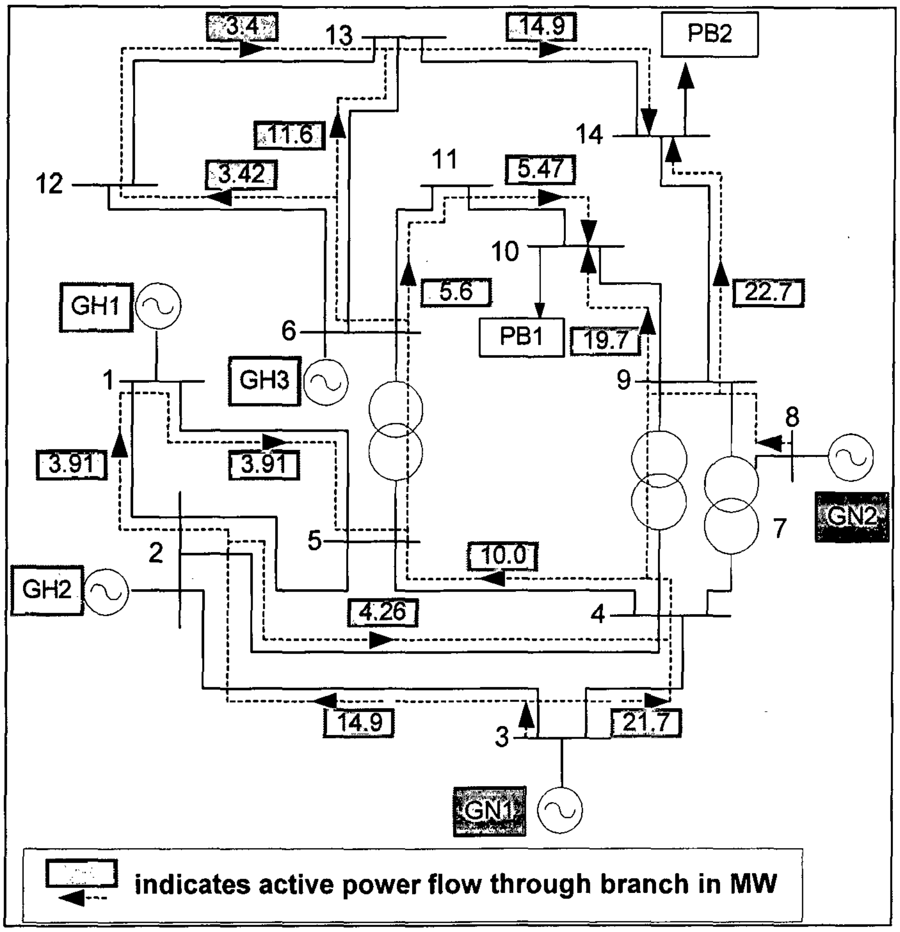

Figure 5.4: Active Power Flow Increase of IEEE-14 Bus System for Maximization of Social Welfare Including Wheeling Charges

For 14-bus system it is observed that, when power demand is made elastic, the generation level and power demand of host utility as well as non-utility generators modify to maximize the social benefit. Active power demands decreases and hence active power generation of both host utility and non utility decreases, consequently active power flow through branch decreases (Fig. 5.3 and Fig. 5.4). But reactive power demands of host utility decreases whereas reactive power demands of the non utility increases. Hence reactive generation of host utility is decreased, but at the same time reactive generation of non utility is increased. This results in an increase in reactive flow through the branch (Fig. 5.5, Fig. 5.6).

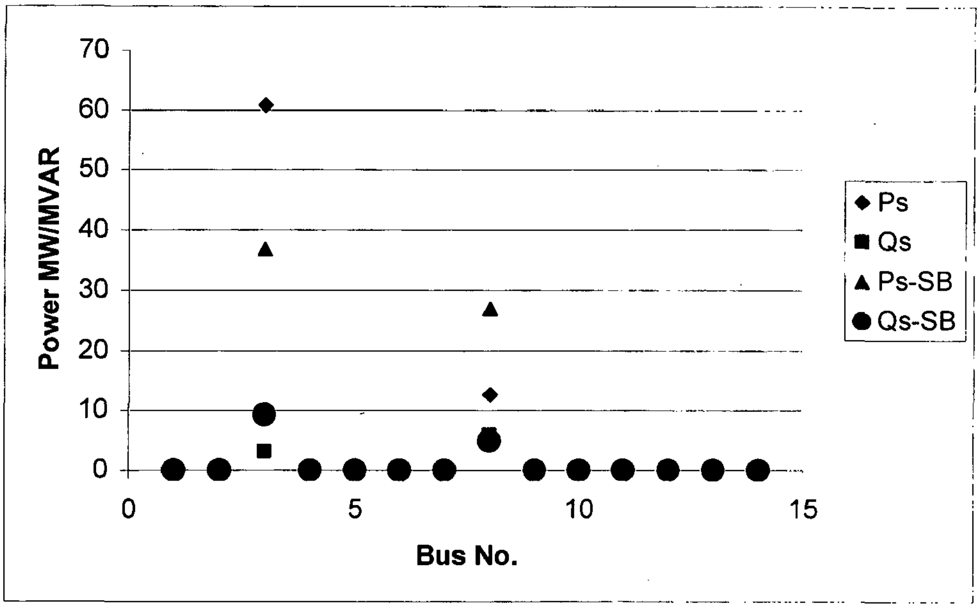

Figure 5.5: Real and Reactive Power Generation Comparison for IEEE-14 Bus System

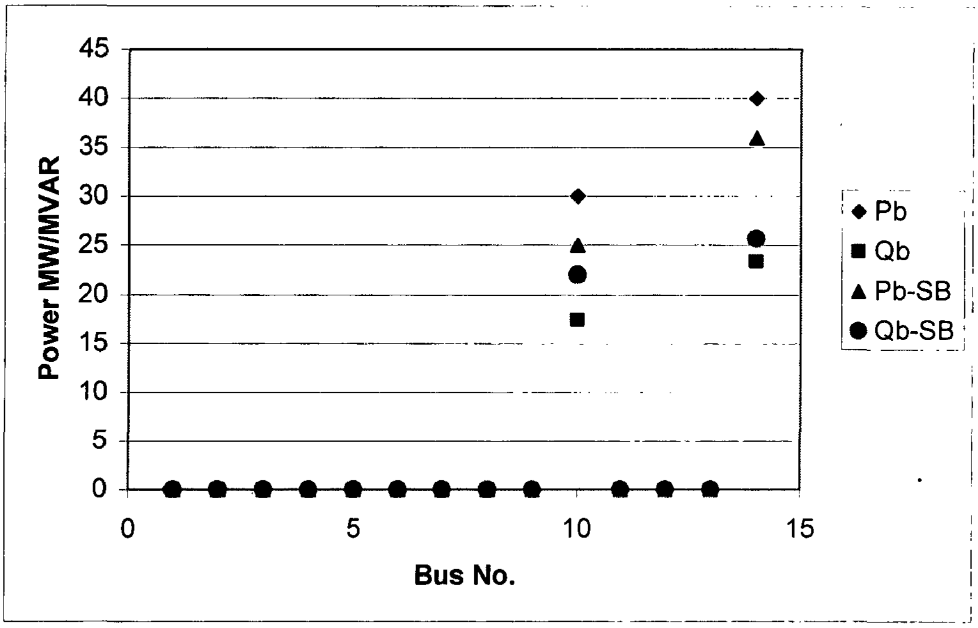

Figure 5.6: Real and Reactive Power Demand Comparison for IEEE-14 Bus System

Now, wheeling charge are paid to the host utility by non-utility when later one use the facility of transmission network of first one to transmit power to its customer. As already, discussed it depends on the how extent, host and non-utility generators are using transmission facility to transact power to their customer. For the 14-bus system it is observed that because of increase in reactive generation level and reactive power demand level of non utility, there is an increase in wheeling charges. Overall losses reduce as compared and because of all this generation costs, of both host utility and non utility, diminish.

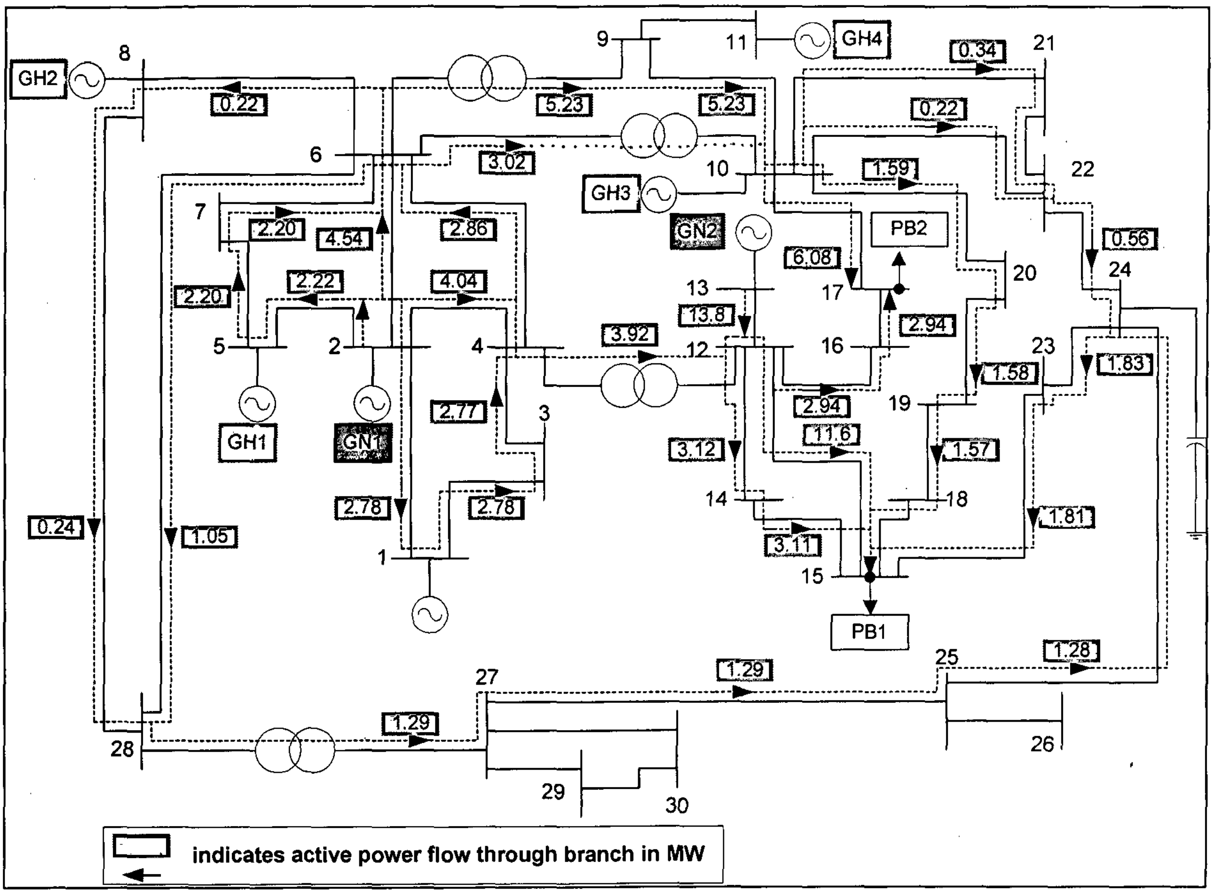

Figure 5.7: Active Power Flow Increase of IEEE-30 Bus System for Economic Dispatch Including Wheeling Charges

Fig. 5.7 shows the increase in the branch power flow due to the power transaction between NUG and its customer for the case of Economic Dispatch including wheeling charges of IEEE-30 bus system. Similarly, for the case of maximizing social welfare including wheeling charges, Fig. 5.8 shows the increase in the active power flow through the branches.

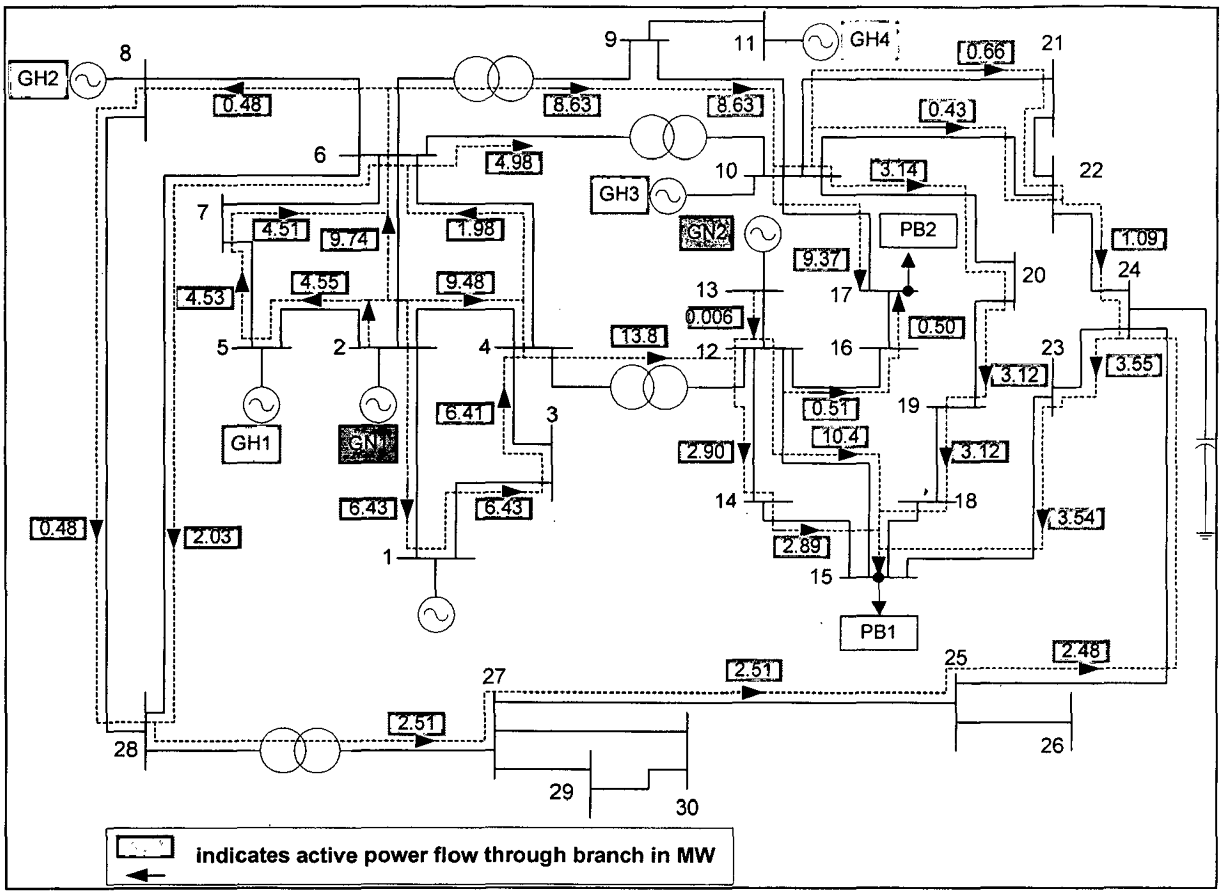

Figure 5.8: Active Power Flow Increase of IEEE-14 Bus System for Maximization of Social Welfare Including Wheeling Charges

For 30-bus system it is observed that during the maximizing the social welfare, active and reactive power generation of host utility reduces because of the reduction in the active and reactive power demand of the host utility as compare to simple economic dispatch including wheeling charges, resulting in to the reduction of the generation costs of host utility generators. But due to increase in non utility active power demand, active power generation of non utility generation increases whereas there is a drop off in reactive power generation of the same. Hence there is an increase in generation costs of the non utility generation. Here almost all the load of the non utility customer is supplied by generator which is situated more nearer to load whereas in the simple economic dispatch, total load is served by both non utility generators equally (Fig 5.7 and Fig 5.8). Therefore the utilization of the transmission network by the non utility generators to serve the load to their customers reduces and it causes reduction in wheeling charges.

5.5 Results for Maximizing Social Benefit with Consideration of Transmission Congestion

5.5.1 Results for Ieee-14 Bus System

TABLE 5.27: BUS POWER, VOLTAGE AND ANGLES

Bus No.	Host utility		Non-utility				Bus marginal price in mu/hr
	Pd in MW	Qd iin MVAR	Pb in MW	Qb in MVAR	V in p.u.	δ in rad	
1	0	0	0	0	1.045	0	28.9
2	17.4	10.1	0	0	1.045	0.0217	26.845
3	75.3	0	0	0	1.059	0.0872	31.103
4	38.3	-4.8	0	0	1.035	0.3132	26.476
5	6.1	1.2	0	0	1.030	0.0681	23.695
6	8.9	2.5	0	0	1.047	-1.9542	28.133
7	0	0	0	0	1.043	1.9258	27.953
8	0	0	0	0	1.054	7.3785	27.953
9	23.6	0	0	0	1.032	-0.6767	28.62
10	7.2	1.4	18.225	26.2	1.012	-1.1986	28.857
11	2.8	1.4	0	0	1.029	-1.5523	28.666
12	4.8	1.3	0	0	1.037	-2.2723	29.165
13	10.8	4.6	0	0	1.024	-2.356	29.309
14	11.9	4	43.076	28.03	0.949	-4.0537	30.091
Total	207.0	21.7	61.30	54.23			

TABLE 5.28: BRANCH FLOW

Branch No.	From Bus	To Bus	From Bus injection		To Bus injection		Losses	
			P in MW	Qin MVAR	P in MW	Q in MVAR	P in MW	Q in MVAR
1	1	2	93.93	-7.79	-92.34	1.13	1.585	4.84
2	1	5	55.06	7.79	-53.58	-12.23	1.477	6.10
3	2	3	56.83	-5.95	-55.27	3.14	1.564	6.59
4	2	4	45.76	1.85	-44.54	-5.42	1.210	3.67
5	2	5	37.78	6.10	-37.07	-11.28	0.713	2.18
6	3	4	-15.00	13.97	15.33	-15.83	0.329	0.84
7	4	5	-34.18	20.43	34.52	-19.35	0.342	1.08
8	4	7	8.27	0.97	-8.27	0.70	0	1.68
9	4	9	16.82	4.65	-16.82	-3.42	0	1.23
10	5	6	50.03	41.66	-50.03	-36.77	0	4.90
11	6	11	5.77	7.92	-5.68	-7.71	0.097	0.20

TABLE 5.28: BRANCH FLOW CONTINUE								
Branch No.			From Bus injection		To Bus injection		Losses	
	From Bus	To Bus	P in MW	Qin MVAR	P in MW	Qin MVAR	P in MW	Qin MVAR
12	6	12	9.57	4.11	-9.51	-3.98	0.064	0.13
13	6	13	25.79	16.24	-25.49	-15.65	0.301	0.59
14	7	8	-59.27	-3.61	59.27	9.32	0	5.71
15	7	9	67.54	2.91	-67.54	-0.18	0	2.72
16	9	10	22.82	21.99	-22.622	-21.46	0.203	0.54
17	9	14	37.94	23.19	-36.38	-19.88	1.559	3.32
18	10	11	-2.80	-6.14	2.88	4.2193	0.073	0.17
19	12	13	4.71	2.68	-4.66	-2.245	0.042	0.04
20	13	14	19.35	13.69	-18.60	-10.37	0.755	1.54
Shunt (injection)							-	41.6
Branch charging(injection)							-	48.7
Total							10.312	48.06

TABLE 5.29-A: EVALUATED COSTS FOR HOST UTILITY

Bus No.	Pg in MW	Pg cost in mu/hr	Bus No.	Pd in MW	Pd Cost in mu/hr
1	148.99	3934.9	2	17.4	451.06
2	65.43	2378.6	3	75.3	2183.2
6	0	0	4	38.3	1561.3
			5	6.1	133.16
			6	8.9	246.26
			9	23.6	757.09
			10	7.2	361.04
			11	2.8	140.16
			12	4.8	240.46
			13	10.8	304.99
			14	11.9	339.98
Total	214.42	6313.5	Total	207.1	6718.7

TABLE 5.29-B: EVALUATED COSTS FOR NON UTILITY

Bus No.	Pg in MW	Pg cost in mu/hr	Bus No.	Pd in MW	Pd Cost in mu/hr
3	5.029	106.91	10	18.2250	571.88
8	59.27	1336.59	14	43.076	1188.23
Total	64.3	1443.5	Total	61.30	1760.11

TABLE 5.30: TOTAL EVALUATED COSTS IN MU/HR

	Host Utility	Non Utility
Generation	6313.52	1443.52
Customer Cost	6718.72	1760.1105
Social Benefit value	405.2	316.69
Total wheeling Charges		1435.15
Wheeling cost due to customer load at bus 10		426.6753
Wheeling cost due to customer load at bus 14		1008.4756

TABLE 5.31: PROFIT OF SUPPLIER AND CUSTOMER AT EACH ITERATION

Iteration No.	Supplier Profit in mu/hr	Min Supplier Profit in mu/hr	Customer Profit in mu/hr	Min Customer Profit in mu/hr
1	250.1388	131.435	-19.1023	36.4497
2	163.07	133.947	12.7932	34.349
3	73.063	137.4533	37.7987	32.5637
4	367.4217	115.48	59.6942	35.2022

5.5.2 *Results for Ieee-30 Bus System*

TABLE 5.32: BUS POWER, VOLTAGES AND ANGLES

Bus No.	Host utility		Non-utility				Bus marginal price in mu/hr
	Pd in MW	Qd in MVAR	Pb in MW	Qb in MVAR	V in p. u.	δ in rad	
1	0	0	0	0	0.943	0	30.51
2	13.3	6.2	0	0	0.941	0.2735	28.78
3	1.9	0.95	0	0	0.944	-0.6259	17.06
4	6.1	1.3	0	0	0.943	-0.7539	21.18
5	59.4	7.2	0	0	0.949	-0.3515	26.28
6	0	0	0	0	0.948	-0.8856	23.44
7	14.3	4.8	0	0	0.949	-0.6848	24.78
8	20	12	0	0	0.949	-0.9180	23.57
9	0	0	0	0	0.983	-1.7857	23.19
10	4.7	1.8	0	0	0.99	-2.2517	23.06
11	0	0	0	0	0.983	-1.7857	23.19
12	9	2	0	0	0.983	-2.5105	22.11
13	0	0	0	0	0.98	-2.5063	22.11
14	4.95	1.3	0	0	0.977	-2.8248	22.52
15	6.55	2	17.94	11.868	0.968	-2.9847	22.70
16	2.8	1.45	0	0	0.982	-2.4783	22.64
17	7.2	3.05	7.232	8.492	0.981	-2.4612	23.00
18	2.55	0.72	0	0	0.976	-2.7279	23.10
19	7.6	2.7	0	0	0.980	-2.5785	23.26

TABLE 5.32: BUS POWER, VOLTAGES AND ANGLES CONTINUE							
Bus No.	Host utility		Non-utility				Bus marginal price in mu/hr
	Pd in MW	Qd in MVAR	Pb in MW	Qb in MVAR	V in p. u.	δ in rad	
20	1.75	0.55	0	0	0.983	-2.5009	23.23
21	10	5.75	0	0	0.99	-2.2835	23.21
22	0	0	0	0	0.99	-2.2936	23.20
23	2.55	1.3	0	0	0.977	-2.7419	23.07
`24	6.95	2.15	0	0	0.988	-2.4215	23.40
25	0	0	0	0	0.988	-1.8467	23.52
26	2.8	1.85	0	0	0.988	-1.8467	23.88
27	0	0	0	0	0.987	-1.4905	23.45
28	0	0	0	0	0.95	-0.9890	23.54
29	1.9	0.72	0	0	0.987	-1.4905	23.99
30	8.5	1.5	0	0	0.987	-1.4905	24.36
Total	194.8	61.29	25.17	20.36			

TABLE 5.33: BRANCH FLOW

Branch No.	From Bus	To Bus	From Bus injection		To Bus injection		Losses	
			P in MW	Q in MVAR	P in MW	Q in MVAR	P in MW	Q in MVAR
1	1	2	93.41	-1.63	-91.71	-3.77	1.70	5.09
2	1	3	56.42	1.63	-55.33	-5.69	1.09	3.99
3	2	4	33.92	-1.40	-33.50	-4.49	0.42	1.28
4	3	4	53.43	4.74	-53.13	-5.51	0.29	0.85
5	2	5	28.20	-22.76	-27.84	15.97	0.365	1.53
6	2	6	41.89	-5.36	-41.20	0.16	0.689	2.09
7	4	6	36.02	-17.28	-35.86	16.10	0.159	0.55
8	5	7	19.01	16.50	-18.73	-19.87	0.272	0.69
9	6	7	-4.36	-18.14	4.43	15.07	0.075	0.23
10	6	8	20.51	13.30	-20.43	-14.75	0.082	0.29
11	6	9	28.31	-7.40	-28.31	8.46	0	1.06
12	6	10	16.39	-2.08	-16.39	2.96	0	0.88
13	9	11	0	6.07	0	-6.0	0	0.07
14	9	10	28.31	-14.53	-28.31	15.16	0	0.63
15	4	12	44.51	25.98	-44.51	-22.56	0	3.42
16	12	13	-0.05	2.45	0.05	-2.44	0	0.01
17	12	14	8.60	3.07	-8.54	-2.96	0.053	0.11
18	12	15	22.430	11.46	-22.23	-11.07	0.204	0.40
19	12	16	4.530	3.57	-4.51	-3.52	0.025	0.05
20	14	15	3.59	1.66	-3.57	-1.64	0.022	0.02
21	16	17	1.71	2.07	-1.71	-2.06	0.003	0.01
22	15	18	1.28	-0.11	-1.24	0.18	0.034	0.07

TABLE 5.33: BRANCH FLOW CONTINUE								
Branch No.			From Bus injection		To Bus injection		Losses	
	From Bus	To Bus	P in MW	Q in MVAR	P in MW	Q in MVAR	P in MW	Q in MVAR
23	18	19	-1.31	-0.90	1.32	0.93	0.01	0.02
24	19	20	-8.92	-3.63	8.93	3.66	0.017	0.03
25	10	20	10.75	4.36	-10.68	-4.21	0.069	0.15
26	10	17	12.78	9.61	-12.73	-9.48	0.48	0.13
27	10	21	10.89	4.04	-10.86	-3.96	0.38	0.08
28	10	22	5.57	1.63	-5.55	-1.59	0.019	0.04
29	21	22	0.86	-1.79	-0.86	1.79	0	0
30	15	23	0.032	-1.05	-0.002	1.11	0.03	0.06
31	22	24	6.41	-0.21	-6.38	0.25	0.03	0.05
32	23	24	-2.55	-2.41	2.57	2.46	0.024	0.05
33	24	25	-3.14	3.98	3.17	-3.93	0.026	0.04
34	25	26	2.83	1.89	-2.8	-1.85	0.028	0.04
35	25	27	-5.6	2.04	6.02	-1.20	0.023	0.04
36	28	27	16.59	1.36	-16.6	-0.55	0	0.81
37	27	29	4.92	1.28	-4.87	-1.18	0.053	0.10
38	27	30	5.65	1.27	-5.55	-1.08	0.1	0.19
39	29	30	2.97	0.46	-2.95	-0.42	0.021	0.04
40	8	28	0.43	-7.25	-0.42	-0.94	0.005	0.02
41	6	28	16.21	-1.95	-16.17	-0.422	0.038	0.14
Shunt (injection)							-	48.4
Branch charging(injection)							-	64.5
Total							6.068	25.36

TABLE 5.34-A: EVALUATED COSTS FOR HOST UTILITY

Bus No.	Pg in MW	Pg cost in mu/hr	Bus No.	Pd in MW	Pd Cost in mu/hr
1	149.8	3859.39	2	13.3	341.07
5	50.57	2048.39	3	1.9	47.67
8	0	0	4	6.1	154.3
11	0	0	5	59.4	2743.6
			7	14.3	367.40
			8	20.0	519.37
			10	4.7	118.57
			12	9.0	228.92
			14	4.95	124.94
			15	6.55	165.83
			16	2.8	70.38
			17	7.2	325.04
			18	2.55	64.06
			19	7.6	192.80

TABLE 5.34-A: EVALUATED COSTS FOR HOST UTILITY CONTINUE

Bus No.	Pg in MW	Pg cost in mu/hr	Bus No.	Pd in MW	Pd Cost in mu/hr
			20	1.75	43.90
			21	10	254.84
			23	2.55	64.06
			24	6.95	176.09
			26	2.8	70.38
			29	1.9	85.57
			30	8.5	216.0
Total	200.4	5907.8	Total	194.8	6374.8

TABLE 5.34-B: EVALUATED COSTS FOR NON UTILITY IN mu/hr

Bus No.	Pg in MW	Pg cost in mu/hr	Bus No.	Pb in MW	Pb Cost in mu/hr
2	25.60	675.69	15	17.94	502.78
13	0.005	1.01	17	7.232	181.15
Total	25.65	676.7	Total	25.18	683.93

TABLE 5.35: TOTAL EVALUATED COSTS IN mu/hr

	Host Utility	Non Utility
Generation	5907.78	676.7
Customer Cost	6374.77	683.93
Social Benefit value	466.98	7.23
Total wheeling Charges		936.43
Wheeling cost due to customer load at bus 15		667.2376
Wheeling cost due to customer load at bus 17		269.1889

TABLE 5.36: PROFIT OF SUPPLIER CUSTOMER AT EACH ITERATION

Iteration No.	Supplier Profit in mu/hr	Min Supplier Profit in mu/hr	Customer Profit in mu/hr	Min Customer Profit in mu/hr
1	161.668	66.617	-18.442	16.39
2	177.397	58.969	6.298	14.6613
3	182.098	56.348	11.012	14.128
4	185.65	54.14	14.569	13.678

Note:

In section 5.5, results for maximizing social welfare with consideration of transmission congestion are tabulated for both IEEE-14 bus system and IEEE-30 bus system.

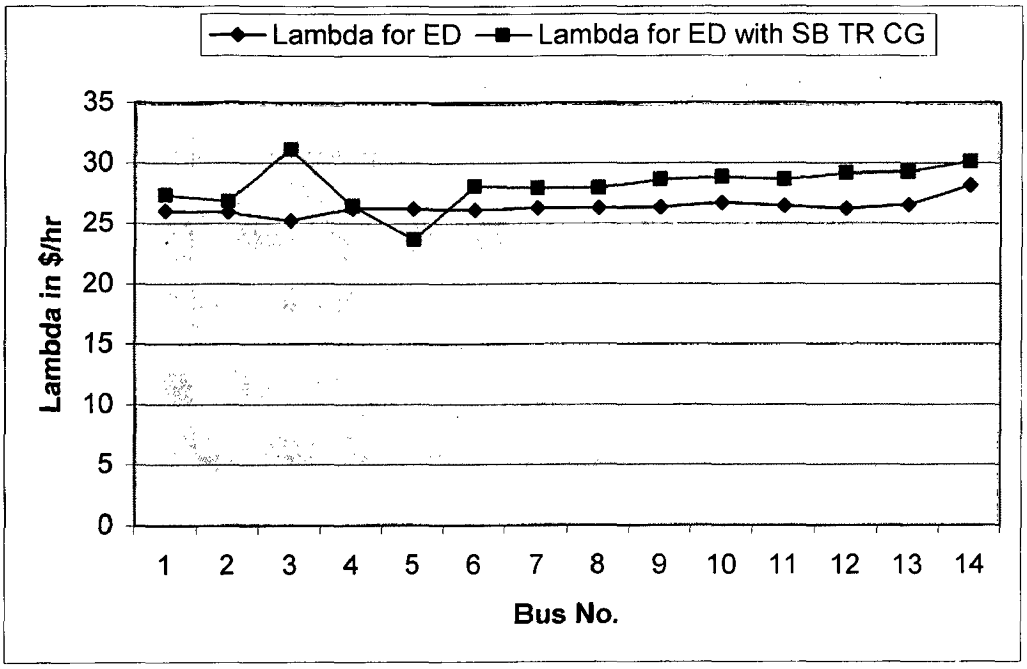

Figure 5.9: Comparison of Lambda (λ) of Different ED Models for IEEE-14 Bus System

The Langrage multipliers Lambda (λ) are often interpreted as the optimal bus or nodal, prices and associated with the demand-supply balance. λ denotes the sensitivity of the objective function to a change in system demand and is more commonly known as system incremental cost as it represents the change in system cost for a 1 MW change in power system demand i.e. bus marginal cost.

In Fig. 5.9, comparison of λ values for two different economic dispatches for IEEE-14 bus system, for both cases, is shown. Lambda values for ED model of maximizing social welfare considering transmission congestion are slightly higher than that of the Lambda values of ED including wheeling charges and hence bus marginal costs in the case of maximizing the social welfare are higher than that of the economic dispatch including wheeling charges. This happens because of the remarkable increase in reactive power demand of non utility which results in to the increase of the reactive power generation of the same. Also the active power dispatched by both non utility generators changed. Compared to this λ values of IEEE-30 bus system reduce (Fig. 5.10) as reactive power demand remains almost same for both case, ED including wheeling charges and maximizing social welfare considering transmission congestion. Hence bus marginal cost in case of IEEE-14 bus system increases whereas in the case of IEEE-30 bus system it decreases.

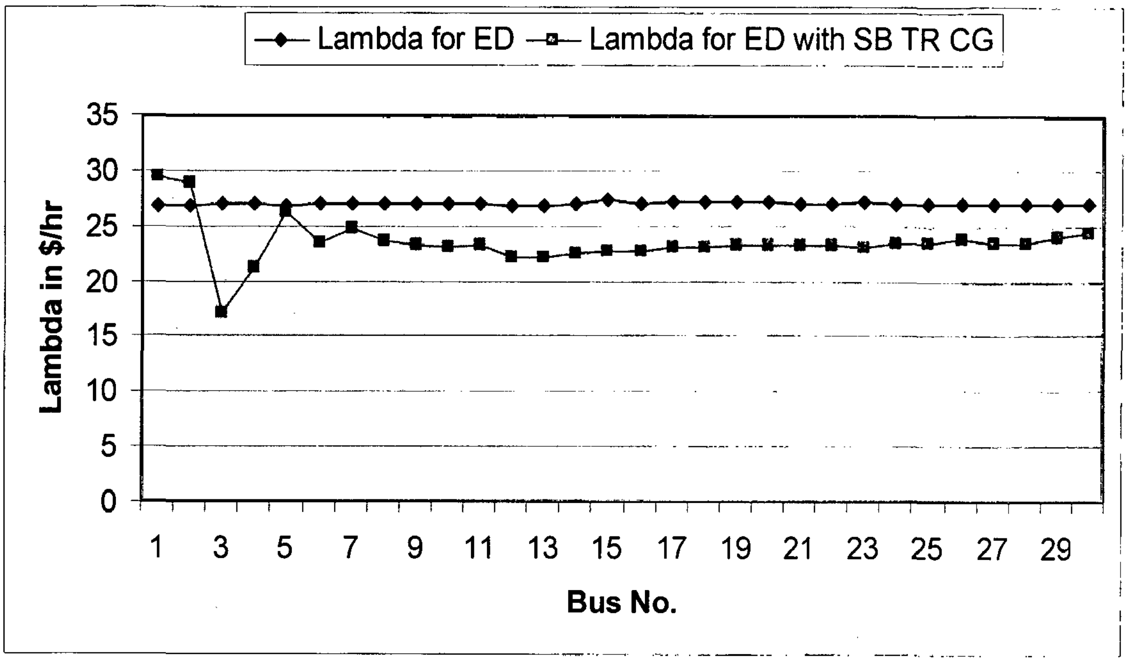

Figure 5.10: Comparison of Lambda (λ) of Different ED Models for IEEE-30 Bus System

For the IEEE-14 bus system, when we compared results, it is observed that there is some increase in the real power demand and hence real power generation increases to get the minimum profit for supplier and customer. Fig 5.11(a) and Fig. 5.11(b) shows a comparative chart of these power generation and demand. The reactive power demand is increased very much in the case of maximizing social welfare including wheeling charges.

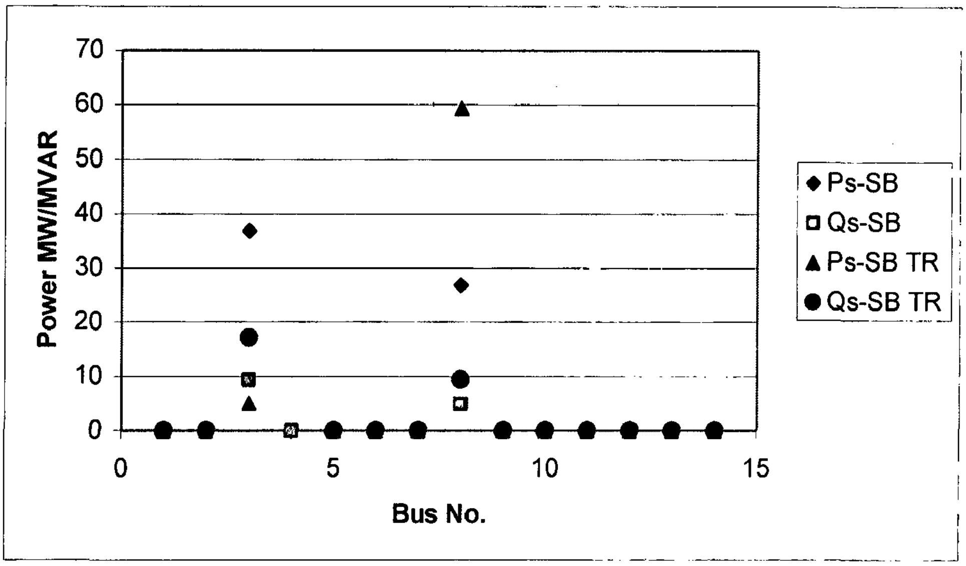

Figure 5.11 (a): Real and Reactive Power Generation Comparison for IEEE-14 Bus System

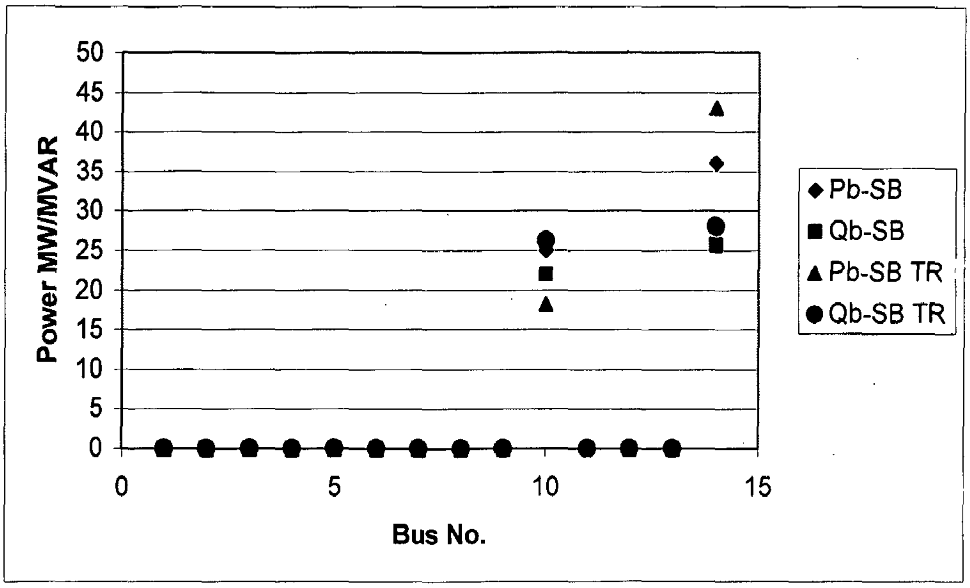

Figure 5.11(b): Real and Reactive Power Demand Comparison for IEEE-14 Bus System

From the comparison shown in the Fig. 5.11, it is clear that the generators are rescheduled to dispatch the load when transmission congestion is considered. The generator more nearer to the load, supplies more compared to other to get the minimum value of profit, and hence wheeling charges reduced in this case even though power demand increased slightly. Also social benefit value increases as compared.

Fig. 5.12(a) and Fig. 5.12(b) give a comparative idea about power generation and demand for IEEE-30 bus system for both ED models.

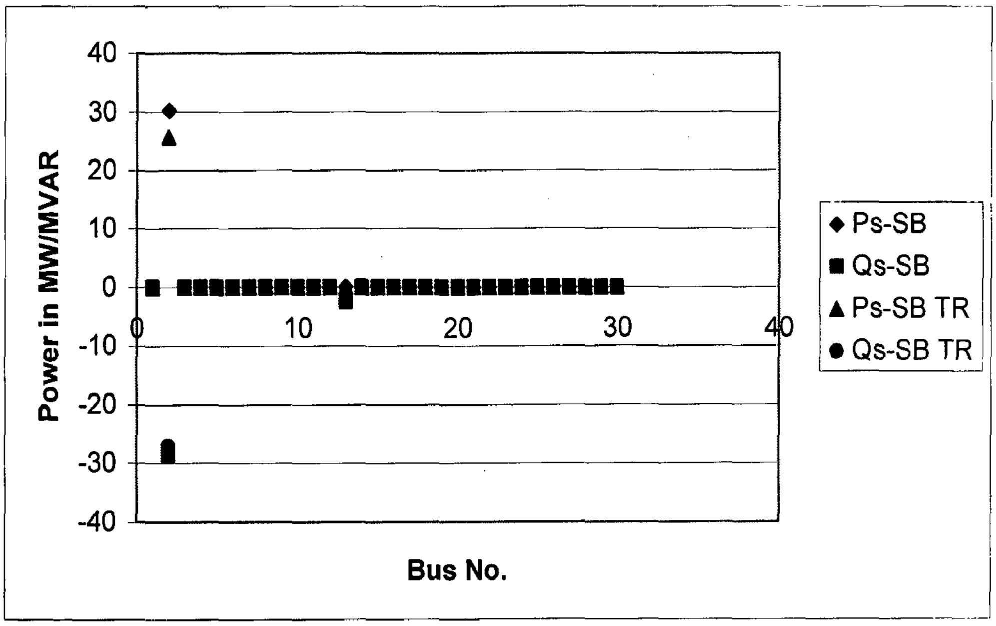

Figure 5.12 (a): Real and Reactive Power Generation Comparison of IEEE-30 Bus System

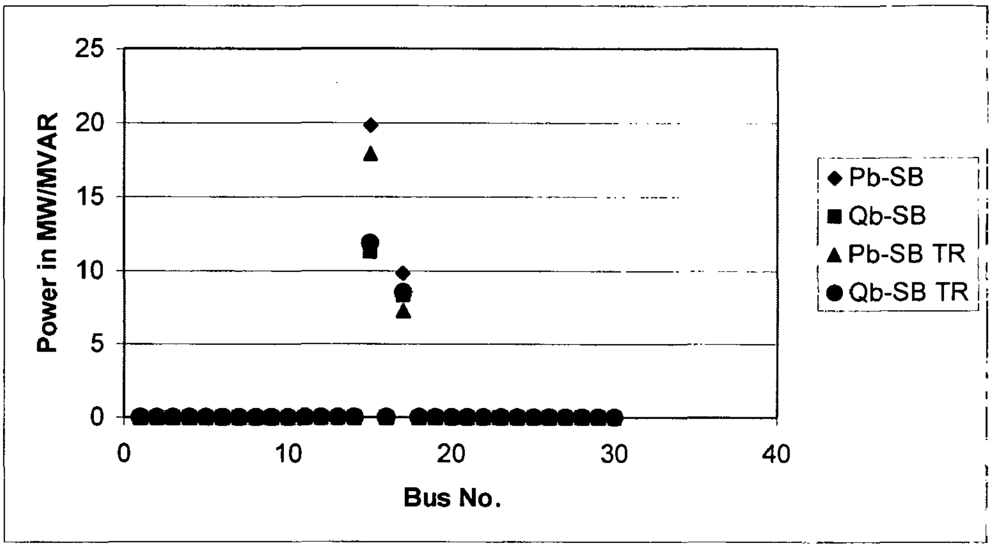

Figure 5.12 (b): Real and Reactive Power Demand Comparison of IEEE-30 Bus System

From the Fig. 5.12, it is clear that both active and reactive power demand is reduced in the case of maximizing social welfare considering transmission congestion compared to maximizing social welfare without transmission congestion. Consequently active and reactive power generation reduced due to which wheeling charges reduced. There is an increase in social welfare value whereas decrease in generation cost.

Chapter 6

Conclusion

Under deregulated environment economic dispatch problem is very different from that of conventional economic dispatch which only takes in to account generation fuel cost. The economic dispatch problem, considering wheeling cost becomes more complex because of the influences of wheeling cost on economic dispatch. Here wheeling cost function is derived from Z-bus matrix and represented as a function of power output of each unit. Then this wheeling cost function is combined with the generation fuel cost function to form an objective function for economic dispatch with inclusion of wheeling transaction. Results have shown that unit output is determined by both generation fuel cost and wheeling cost.

Maximization of social welfare is always an interest of utilities. Maximization of social welfare problem including wheeling charges is developed and solved. These Results are compared with results of Economic Dispatch (ED) including wheeling charges. It is observed that overall generation cost of system reduces. As wheeling charges depends on the branch flow, it increases for IEEE-14 bus system, where as it decreases for IEEE-30 bus system.

Transmission congestion problem arises due to thermal limits of transmission lines, and because of increasing number of power transactions, that takes place between utilities and its customers under deregulated environment. To relieve transmission congestion, an iterative algorithm is presented which is based on the maximization of social welfare and revenue adequacy constraints of both supplier and customer. These results are compared with that of maximization of social welfare including wheeling charges. It reveals that wheeling charges and generation cost reduces where as social welfare value increases.

References

1. Wen-chen Chu, Bin-kwie Chen and Neng-Sheng Hsu, "The economic dispatch with consideration of transmission service charge for a generation company", *IEEE* Tans. on Power Systems, vol. 16, No. 4, pp. 737-742, November 2001.

2. Ji wang and Furong Li, "Optimal economic environment dispatch considering wheeling charge", International conference of Universities power engineering, pp. 398-401, 2004.

3. S. H. Hussaini, M. Kheradmandi, "Dynamic economic dispatch in restructured power systems considering transmission costs using genetic algorithm", CCECE 2004 – CCGEI 2004, Niagara falls, pp. 1625-1628, May 2004.

4. Ying-Yi Hong, and Chih-Yuhan Li, "Genetic algorithm based economic dispatch for cogeneration units considering multiplant multibuyer wheeling", *IEEE* Tans. on Power Systems, vol. 17, No. 1, pp. 134-140, February 2002.

5. R. W. Ferrero and S. M. Shahidehpour, "Dynamic economic dispatch in deregulated systems", Electrical Power and Energy Systems, , vol. 19, No. 7 pp. 433-439, 1997.

6. Yog Raj Sood, Narayan Prasad Pathy and Hari Om Gupta, "Assessment for feasibility and pricing of wheeling transactions under deregulated environment", Electrical Power and Energy Systems 26, pp. 163-171, 2004.

7. Yog Raj Sood, S. Verma, Narayana Prasad Pathy and H. O. Gupta, "Evolutionary programming based algorithm for selection of wheeling options", *IEEE* Tans. on Power Systems, pp. 545-550, 2001.

8. David A. K., "Dispatch Methodologies for open access transmission systems", *IEEE* Tans. on Power Systems, vol. 13, No. 1, pp. 134-140, February 1998.

9. R. S. Fang and David A. K., "Optimal dispatch under transmission contracts", *IEEE* Tans. on Power Systems, vol. 14, No. 2, pp. 732-737, May 1999.

10. B. L. P. P. Perera, E. D. Farmer and B. J. Cory, "Revenue Reconciled Optimum Pricing of Transmission Services", *IEEE* Tans. on Power Systems, vol. 11, No. 3, pp. 1419-1426, Aug. 1996.

11. Poalo Marannino, Riccardo Vailati, Fabio Zanelini, Ettore Bompaard and Geroge Gross, "OPF tools for optimal pricing and congestion management in a two sided auction market structure", *IEEE* Power Tech Proceedings, 2001, Porto, Portugal.

12. James D. Weber, Thomas J. Overbye and Christopher L. DeMarco, "Inclusion of Price Dependent Load Models in the Optimal Power Flow", *IEEE* Proceedings of Hawai Intrnational Conference on System Sciences, Jan., 1998, Koana, Hawai.

13. Francisco D. Galiana, Ivana Kockar and Pablo Cuervo Franco, "Combined Pool/Bilateral Dispatch-Part I: Performance of Trading Stratergy", *IEEE* Tans. on Power Systems, vol. 17, No. 1, pp. 92-99, Feb.,. 2002.

14. Thomas W. Gedra, "On Transmission Congestion and Pricing", *IEEE* Tans. on Power Systems, vol. 14, No. 1, pp. 241-248, Feb.,1999.

15. Dariush Shrimohammadi, Xisto Vieira, Boris Gorenstin and Mario V. P. Pereira, "Some fundamental technical concept about cost based transmission pricing", *IEEE* Tans. on Power Systems, vol. 11, No. 2, pp. 1002-1007, May 1996.

16. Dariush Shrimohammadi, Chithra Rajagopalan, Eugene R. Alward and Chifong L. Thomas, "Cost of transmission transactions: An introduction", *IEEE* Tans. on Power Systems, vol. 6, No. 3, pp. 1006-1015, August 1991.

17. H. H. Happ, "Cost of wheeling methodologies", *IEEE* Tans. on Power Systems, vol. 9, No. 1, pp. 147-156, August 1994.

18. Ross R. Kovacs and Allen L. Leverlett, "A load flow based method for calculating embedded, incremental and marginal cost of transmission capacity", *IEEE* Tans. on Power Systems, vol. 9, No. 1, pp. 272-278, February 1994.

19. Kanakar Bhattachrya, Math H. J. Bollen and Jaap E. Daalder, "Operation of Restructured Power Systems", Kluwer Academic Publishers, 2001.

20. Young-Hua Song and Xi-Fan Wang(Eds.), "Operation of Market-oriented Power Systems", Springer Publications, 2003.

21. Loi Lei Lai, "Power System Restructuring and Deregulation", John Wiley and Sons Ltd., 2003.

Appendix-A

Sequential Quadratic Programming Algorithm

The Sequential Quadratic Programming method has a theoretical basis that is related to

1. the solution of a set of a nonlinear equations using Newton's method
2. the derivation of simultaneous nonlinear equation using Kuhn-Tucker conditions to the Lagrangian of the constrained optimization problem.

At each major iteration, an approximation is made of the Hessian of Langrangian function using a quasi-Newton updating method. This is then used to generate QP subproblem whose solution is used to form a search direction for a line search procedure.

A general problem (GP) description is stated as

$$\min_x imize\, f(x) \tag{1}$$

subject to

$$G_i(x)=0 \qquad i=1,2......m_e$$

$$G_i(x)\le 0 \qquad i=m_e+1,.....,m$$

The principal idea is the formulation of a QP subproblem based on a quadratic approximation of the Lagrangian function.

$$L(x,y)=f(x)+\sum_{i=1}^{m}\lambda_i\bullet g_i(x) \tag{2}$$

Here equation (1) is simplified by assuming that bound constraints have been expressed as inequality constraints. QP subproblem is obtained by liearizing the nonlinear constraints.

Quadratic Subprogramming (QP) Subproblem

$$\min_{d\in R^n} imize\ \frac{1}{2}d^T H_K d+\nabla f(x_k)T_d$$

$$\nabla g_i(x_k)T_d+g_i(x_k)=0 \qquad i=1,2......m_e$$

$$\nabla g_i(x_k)T_d+g_i(x_k)\le 0 \qquad i=m_e+1,.....,m \tag{3}$$

The subproblem is can be solved using any QP algorithm. The solution is used to form a new iterate

$$x_{k+1} = x_k + \alpha_k d_k$$

The step length parameter α_k is determined by an approximate line search procedure so that sufficient decrease in merit function is obtained. The matrix H_K is a positive definite approximation of the Hessian matrix of Lagrangian function (Equation 2). H_K can be updated by any of the quasi-Newton methods.

SQP Implementation

The SQP implementation consists of three main stages, which are discussed in following subsections:

Stage-I Updating Hessian matrix

At each major iteration a positive definite quasi-Newton approximation of the Hessian of the Lagrangian function, H , is calculated using Broyden, Fletcher, Goldfarb, and Shanno (BFGS) method, where $\lambda_i \left(i = 1, \ldots., m\right)$ is an estimate of Lagrange multipliers.

$$H_{K+1} = H_K + \frac{q_k q_k^T}{q_k^T s_k} - \frac{H_k H_k^T}{s_k^T H_k s_k} \tag{4}$$

Where,

$$s_k = x_{k+1} - x_k$$

$$q_k = \nabla f\left(x_{k+1}\right) + \sum_{i=1}^{n} \lambda_i \bullet \nabla g_i\left(x_{k+1}\right) - \left(\nabla f\left(x_k\right) + \sum_{i=1}^{n} \lambda_i \bullet \nabla g_i\left(x_k\right)\right)$$

It is recommended to keep Hessian positive definite even though it might be positive indefinite at solution point. A positive definite Hessian is maintained providing $q_k^T s_k$ is positive at each update and that H is initialized at positive definite matrix. When $q_k^T s_k$ is not positive, q_k is modified on an element-by-element basis so that $q_k^T s_k > 0$. The general aim of this modification is to distort the elements of q_k, which contribute to a positive definite update, as little as possible. Therefore, in the initial phase of the modification, the most negative element of $q_k \cdot s_k$ is repeatedly halved. This procedure is continued until $q_k^T s_k$ is greater than or equal to a small negative tolerance. If, after this procedure, $q_k^T s_k$ is still not positive, modify q_k by adding a vector v multiplied by a constant w, that is,

$$q_k = q_k + wv \tag{5}$$

Where,

$$v_i = \nabla g_i(x_{k+1}) \cdot g_i(x_{k+1}) - \nabla g_i(x_k) \cdot g_i(x_k)$$

If $(q_k)_i \cdot w < 0$ and $(q_k)_i \cdot (s_k)_i < 0 \quad (i = 1, \ldots, m)$

$v_i = 0$ otherwise

And increase w systematically until $q_k^T s_k$ becomes positive.

Stage-II Quadratic Programming Solution

At each major iteration of the SQP method, a QP problem of the following from is solved, where A_i refers to the ith row of m-by-n matrix A.

$$\min_{d \in \Re^n} imize \ q(d) = \frac{1}{2} d^T H d + c^T d$$

$$A_i d = b_i \qquad i = 1, 2 \ldots\ldots m_e$$

$$A_i d \le b_i \qquad i = m_e + 1, \ldots\ldots, m \tag{6}$$

The solution procedure involves two phases. The first phase involves the calculation of a feasible point (if one exists). The second phase involves the generation of an iterative sequence of feasible points that converge to the solution. In this method an active set, $\overline{A_k}$ is maintained that is an estimate of the active constraints (i.e., those that are on the constraint boundaries) at the solution point.

$\overline{A_k}$ Is updated at each iteration k, and this is used to form a basis for a search direction $\widehat{d_k}$. Equality constraints always remain in the active set $\overline{A_k}$. The notation for the variable $\widehat{d_k}$ is used here to distinguish it from d_k in the major iterations of the SQP method. The search direction $\widehat{d_k}$ is calculated and minimizes the objective function while remaining on any active constraint boundaries. The feasible subspace for $\widehat{d_k}$ is formed from a basis Z_k whose columns are orthogonal to the estimate of the active set $\overline{A_k}$ (i.e, $\overline{A_k} Z_k = 0$). Thus a search direction, which is formed from a linear summation of any combination of the columns of Z_k, is guaranteed to remain on the boundaries of the active constraints.

The matrix Z_k is formed from the last *m-l* columns of the QR decomposition of the matrix $\overline{A_k}^T$, where *l* is the number of active constraints and $l < m$. That is, Z_k is given by

$$Z_k = Q[:, l+1:m] \tag{7}$$

Where,

$$Q^T \overline{A_k}^T = \begin{bmatrix} R \\ 0 \end{bmatrix}$$

Once Z_k is found, a new search direction $\widehat{d_k}$ is sought that minimizes $q(d)$ where $\widehat{d_k}$ is in the null space of the active constraints. That is, $\widehat{d_k}$ is a linear combination of the columns of $Z_k : \widehat{d_k} = Z_k p$: for some vector p. Then if you view the quadratic as a function of *p*, by substituting for $\widehat{d_k}$, we have

$$q(p) = \frac{1}{2} p^T Z_k^T H Z_k p + c^T Z_k p \tag{8}$$

Differentiating with respect to p yields

$$\nabla q(p) = Z_k^T H Z_k p + Z_k^T c \tag{9}$$

$\nabla q(p)$ is referred to as projected gradient of the quadratic function because it is the gradient projected in subspace defined by Z_k. The term $Z_k^T H Z_k$ is called projected Hessian. Assuming the Hessian matrix H is positive definite, then the minimum of the function *q(p)* in the subspace defined by Z_k occurs when gradient $\nabla q(p) = 0$, which is the solution of the system linear equations.

$$Z_k^T H Z_k p = -Z_k^T c \tag{10}$$

A step is then taken of the form,

$$x_{k+1} = x_k + \alpha \widehat{d_k} \quad \text{where} \quad \widehat{d_k} = Z_k^T p$$

At each iteration, because of the quadratic nature of the objective function, there are only two choices of step length α. A step of unity along $\widehat{d_k}$ is the exact step to the minimum of the function restricted to the null space of $\overline{A_k}$. If such a step can be taken, without violation of the constraints, then this is the solution to QP (Equation 7). Otherwise, the step along $\widehat{d_k}$ to the nearest constraint is less than unity and a new constraint is included in the active set at the next iteration. The distance to the constraint boundaries in any direction $\widehat{d_k}$ is given by

$$\alpha = \min_i \left\{ \frac{-(A_i x_k - b_i)}{A_i \widehat{d_k}} \right\} \qquad i = 1,2......m \tag{11}$$

Which is defined as the constraints not in the active set, and where the direction $\widehat{d_k}$ is towards the constraint boundary, $A_i \widehat{d_k} > 0$, $i = 1,2......m$.

When n independent constraints are included in the active set, without location of minimum, Lagrangian multipliers λ_k, are calculated that satisfy the nonsingular set of linear equations

$$\overline{A_k}^T \lambda_k = c \tag{12}$$

If all the elements of λ_k are positive, x_k is the optimal solution of QP. However if any component of λ_k is negative, and the component does not correspond to equality constraint, then the corresponding element is deleted from the active set and a new iterate is sought.

Stage-III Line Search and Merit Function

The solution of QP subproblem produces a vector d_k, which is used to form a new iterate

$$x_{k+1} = x_k + \alpha d_k \tag{13}$$

The step length parameter α_k is determined in order to produce a sufficient decrease in a merit function. The merit function of the following form is used in this implementation.

$$\psi(x) = f(x) + \sum_{i=1}^{m_e} r_i \cdot g_i(x) + \sum_{i=m_e+1}^{m} r_i \cdot \max\{0, g_i(x)\} \tag{14}$$

Following setting parameter is used

$$r_i = (r_{k+1})_i = \max_i \left\{ \lambda_i, \left(\frac{1}{2}(r_k)_i + \lambda_i \right) \right\}, \qquad i = 1,2......m \qquad (15)$$

This allows positive contribution from constraints that are inactive in the QP solution but where recently active. In this implementation, the penalty parameter r_i is initially set to

$$r_i = \frac{\|\nabla f(x)\|}{\|\nabla g_i(x)\|} \qquad (16)$$

Where $\| \; \|$ represents the Euclidean norm.

This ensures larger contributions to the penalty parameter from constraints with smaller gradients, which would be the case for active constraints at solution point.