ANALYSIS AND SIMULATION OF AN EXISTING MEE SYSTEM WITH REHEATERS

A DISSERTATION

Submitted in partial fulfillment of the requirements for the award of the degree

of

MASTER OF TECHNOLOGY

in

CHEMICAL ENGINEERING

(With Specialization in Computer Aided Process Plant Design)

By

ASHOK KUMAR KODURU

CENTRAL LIBRARY
Acc. No. G13816
Date 24/10/08
I.I.T. ROORKEE

DEPARTMENT OF CHEMICAL ENGINEERING
INDIAN INSTITUTE OF TECHNOLOGY ROORKEE
ROORKEE - 247 667 (INDIA)

JUNE, 2008

CANDIDATE'S DECLARATION

I hereby declare that the work which is being presented in the dissertation entitled **"ANALYSIS AND SIMULATION OF AN EXISTING MEE SYSTEM WITH REHEATERS"**, in partial fulfillment of the requirements for the award of the degree of Master of technology in Chemical Engineering with *specialization in* **"Computer Aided Process Plant Design"**, and submitted to the **Department of Chemical Engineering, Indian Institute of Technology, Roorkee**, is an authentic record of the work carried out by me during the period June 2007 to June 2008, under the guidance of **Dr. RAVINDRA BHARGAVA. (Asst Professor)** The matter embodied in this work has not been submitted for the award of any other degree.

Date: 30/6/08
Place: IIT, Roorkee

K. Ashok Kumar
(ASHOK KUMAR KODURU)

CERTIFICATE

This is to certify that the above statement made by the candidate is correct to the best of my knowledge.

RBhargava 30.6.08

Dr. RAVINDRA BHARGAVA
Department of Chemical Engineering
Indian Institute of Technology, Roorkee

ACKNOWLEDGEMENTS

These few lines of acknowledgement can never substitute the deep appreciation that I have for all those who supported, helped and motivated me throughout this work to take its present shape.

I am greatly indebted to my guide **Dr. RAVINDRA BHARGAVA**, Assistant Professor, Department of Chemical Engineering, IIT Roorkee, with whom this project had taken birth. I would like to sincerely acknowledge his valuable guidance and relentless support, discerning thoughts and loads of inspiration that led me forward to delve deeper into this work.

I would like to thank **Dr. SHRI CHAND**, Head of the Department and Chairman, DRC, for providing various facilities during the course of my work.

I do not have enough words to thank all my friends who encouraged and helped me to complete this work at the earliest.

Above all, I would like to acknowledge that the greatest was played by my parents who kept their pleasures away to educate me and who cultivated the system of values and instincts that shall enlighten my path for the life time.

K. Ashok Kumar

(ASHOK KUMAR KODURU)

ABSTRACT

The present investigation deals with modelling, analysis and simulation of multiple effect evaporator (MEE) system used to concentrate weak Kraft black liquor in the pulp and paper mills for the recovery of cooking chemicals. As the evaporator house in pulp and paper industry consumes about 24-30% of the total energy consumption in the plant so optimum feed flow sequence has to be selected which provides high steam economy and low steam consumption (SC). To improve the steam economy (SE) inclusion of product flashing, condensate flashing, steam splitting has been used. In addition to the above reheaters are used at appropriate places to improve the steam economy as it takes vapor from the vapors generated in the evaporator section.

The investigation considers the variation of input parameters i.e. liquor feed Temperature (T_F), liquor feed rate (F), steam temperature (T_0) and last effect temperature (T_L) to evaluate the influence on SC and SE. The effect of choice of liquor sequence has also been investigated on steam energy requirements.

Equations based on material balances, energy balances and heat transfer rate have been formulated for this purpose.Emperical equations have been included. For the solution of these equations globally convergent method has been employed. A computer program was developed in 'C' and executed using DevCpp software.

This investigation uses the plant data from nearby paper mill for the validation of the results obtained from simulation. Different liquor flow sequences like mixed feed flow sequence (MFFS) and backward feed flow sequence (BFFS) have been studied without including reheaters and with reheaters. The conclusion which can be drawn from this investigation is backward feed flow sequence (BFFS) with reheaters is the optimum feed flow sequence (OFFS) providing highest steam economy (SE) and lowest steam consumption (SC).

CONTENTS

	Title	page no.
	CANDIDATE DECLARATION	i
	ACKNOWLEDGEMENTS	ii
	ABSTRACT	iii
	CONTENTS	iv
	LIST OF TABLES	vi
	LIST OF FIGURES	vii
	NOMENCLATURE	ix
Chapter-1	**INTRODUCTION**	1
1.1	OBJECTIVE OF THE THESIS	3
1.2	ORGANISATION OF THE THESIS	3
Chapter-2	**LITERATURE REVIEW**	4
Chapter-3	**PROCESS DESCRIPTION AND PHYSICAL PROPERTIES**	10
3.1	KRAFT PULPING PROCESS	10
3.2	OPERATIONAL FEATURES OF BLACK LIQUOR	13
3.3	PHYSICAL PROPERTIES OF BLACK LIQUOR AND WATER	14
3.3.1	DENSITY OF BLACK LIQUOR	14
3.3.2	SPECIFIC HEAT OF BLACK LIQUOR	16
3.3.3	BOILING POINT RISE (BPR)	17
3.3.4	OTHER PROPERTIES OF WATER AND STREAM	18
3.4	OPERATION OF MEE SYSTEMS	19
3.5	VARIATION OF OPERATING PARAMETERS IN A SEFFFE SYSTEMS	19
3.6	LIQUOR FLOW SEQUENCE	20
3.7	SELECTION OF EQUATIONS FOR FINDING VARIOUS PROPERTIES OF BLACK LIQUOR AND WATER	21
Chapter-4	**MATHEMATICAL MODELLING**	22

4.1	EVAPORATOR MODEL	22
4.2	FEED FLASH TANK	24
4.3	PRODUCT FLASH TANK	25
4.4	CONDENSATE FLASH TANK	26
4.5	REHEATERS	27
4.6	SCALING METHODOLOGY	27
4.7	SCHEMATIC DIAGRAMS OF DIFFERENT FLOW PATTERNS CONSIDERED	29
4.8	SOLUTION PROCEDURE AND TECHNIQUE	40
Chapter-5	**RESULTS AND DISCUSSION**	43
5.1	VALIDATION OF MODEL	43
5.2	INFLUENCE OF VARIATIONS OF THE INPUT VARIABLES T_0, T_L, T_F, X_F AND F ON SC, SE AND XP	44
Chapter-6	**CONCLUSIONS AND RECOMMENDATIONS**	57
6.1	CONCLUSION	57
6.2	RECOMMENDATIONS	57
REFERENCES		58
APPENDIX-A		62
APPENDIX-B		74

LIST OF TABLES

TABLE NUMBER	TITLE OF THE TABLE	PAGE NUMBER
3.1	Weak Kraft Black Liquor Constituents	13
3.2	Variations in value of operating parameters	20
3.3	Different flow patterns of liquor	20
3.4	Correlations used in the present investigation	21
5.1	Results of SC and SE for different flow sequences	54
5.2	Comparison of SC and SE without and with reheaters	55
B.1	paper mill data for septuple effect falling film evaporator system (Bhargava,2004)	74
B.2	Concentration Vs BPR data	74
B.3	Vapour Phase Mole Fractions on Each Tray	53
B.3	Results showing the effect of T_0 and T_F on SC , SE And x_P when F=15.611 kg/s,x_F=0.118,T_L=52 deg C	76
B.4	Results showing the effect of T_0 and T_L on SC , SE And x_P when F=15.611 kg/s,x_F=0.118,T_F=64.7 deg C	78
B.5	Results showing the effect of T_0 and x_F on SC , SE And x_P when F=15.611 kg/s, T_F=64.7 deg C,T_L=52deg C	80
B.6	Results showing the eefect of T_0 and F on SC,SE And x_P when x_F=0.118, T_F=64.7 deg C,T_L=52deg C	82
B.7	Results howing the effect of SC and SE with and Without reheaters flow sequences (S1, S2, S3, S4, S5)	85

LIST OF FIGURES

FIGURE NUMBER	TITLE OF THE FIGURE	PAGE NUMBER
3.1	Process floe diagram for Kraft process	12
4.1	Block diagram of an evaporator body	22
4.2	Block diagram for feed flash tank	24
4.3	Block diagram for product flash tank	25
4.4	Block diagram for condensate flash tank	26
4.5	Block diagram for reheater	27
4.6	Schematic diagram of a SEFFFE system with product, condensate flashing as well as steam splitting for backward flow sequence (S1)	29
4.6.1	Schematic diagram of a SEFFFE system with product, condensate flashing as well as steam splitting and use of	29
4.7	Schematic diagram of a SEFFFE system with product condensate flashing as well as steam splitting and reheaters for mixed flow sequence (S2)	32
4.8	Schematic diagram of a SEFFFE system with product, condensate flashing as well as steam splitting and reheaters for mixed flow sequence (S3).	34
4.9	Schematic diagram of a SEFFFE system with product, condensate flashing as well as steam splitting and reheaters for mixed flow sequence (S4).	36
4.10	Schematic diagram of a SEFFFE system with product, condensate flashing as well as steam splitting and reheaters for mixed flow sequence (S5)	38
5.1	comparison of vapor temperatures of different effects from plant data and simulation	43
5.2	Comparison of solids concentration in the liquor from plant data and simulation	44

FIGURE NUMBER	TITLE OF THE FIGURE	PAGE NUMBER
5.3	To study the effect of T_0 on SC with T_L as a parameter parameter for flow sequence,S1	45
5.4	To study the effect of T_0 on SE with T_L as a parameter for flow sequence, S1	46
5.5	To study the effect of T_0 on x_P with T_L as a parameter for flow sequence, S1	47
5.6	To study the effect of T_0 on SC with T_F as a parameter for flow sequence, S1	47
5.7	To study the effect of T_0 on SE with T_F as a parameter for flow sequence, S1	48
5.8	To study the effect of T_0 on x_P with T_F as a parameter for flow sequence, S1	49
5.9	To study the effect of T_0 on SC with X_F as a parameter for flow sequence, S1	50
5.10	To study the effect of T_0 on SC with X_F as a parameter for flow sequence, S1	51
5.11	To study the effect of T_0 on x_P with X_F as a parameter for flow sequence, S1	51
5.12	study the effect of T_0 on SC with F as a parameter for flow sequence, S1	52
5.13	To study the effect of T_0 on SC with F as a parameter for flow sequence, S1	53
5.14	To study the effect of T_0 on x_P with F as a parameter for flow sequence, S1	54

NOMENCALTURE

Symbol	
A_j	Area of each effect
C_i	Condensate flow rate
C_j	Condensate flow rate after flashing at temperature T_j
C_P	Specific heat
F	Liquor feed rate
F_{avg}	Liquor feed average
h_F	Enthalpy of feed entering the effect j
h_j	Enthalpy of liquor entering the effet j
H_S	Enthalpy of saturated steam/ vapor
H_{Vj}	Enthalpy of vapour entering the effect j
L_j	Liquor flow rate
l_j	Scaled variable for flow rate of liquor
T.S	Total solids in %
T_0	Steam temperature
T_F	Feed temperature
T_L	Last effect temperature
T_{Lout}	Target temperatures for reheaters
U	Overall heat transfer coefficient
u_j	Scaled variable for temperatures
V_j	Vapor flow rate
v_j	Scaled variable for flow rate of vapour
V_{Rh}	Flow rate of reheater
X_{avg}	Concentration average
X_F	Feed concentration
X_F	Concentration of feed entering the effect j
x_j	Concentration of liquor entering the effect j
ΔT	Driving force

CHAPTER - 1

INTRODUCTION

Evaporators are commonly found in inorganic, organic, paper and sugar industries. Typical applications include the concentration of sodium hydroxide, brine, organic colloids, and fruit juices. As Pulp and paper industry is one of the major core sector industries in India and is highly capital, energy, chemical and labour intensive one. Almost all industries in India manufacturing pulp and paper use wood and bamboo as the major raw material are based on Kraft process. According to Arhippainen et al (1968), Grace and Malcolm (1989) and Veeramani (1978) Kraft process is currently the dominant chemical pulping process. In this process weak black liquor containing about 8-16% solids is processed in a multiple effect evaporator (MEE) system to form concentrated black liquor of approximately 60-65% solids. An energy audit shows that evaporator house of the pulp and paper consumes about 24-30% of the total energy consumption in the plant designating it as energy intensive section (Rao and Kumar, 1985) this claim is justified as evaporation process requires large amount of energy because the latent heat of vaporization of water is large. Due to this optimum operation of MEE is quite beneficial for paper industry.

The objective of evaporation is to concentrate a solution consisting of a non volatile solute and a volatile solvent. Evaporation is conducted by vaporizing a portion of solvent to produce a concentrated solution of thick liquor. Since energy is transferred in an evaporator from condensing vapor to a boiling liquid. In single-effect operation, only one evaporator is employed. The feed upon entering the effect must be heated to the boiling point temperature of the effect at the operating pressure. Then the solvent generally water is evaporated and removed as vapor. The concentrated solution withdrawn is known as thick liquor or process liquid. Whereas in multiple effect evaporator, the vapor or steam produced in the first effect is introduced to the steam chest of the second effect and so on. In order to provide temperature potential required for heat transfer to occur in each effect, it is necessary to be operated at a successively lower pressure. The operating pressure is determined by the condensing capacity of the condenser. If equilibrium exists between vapor and liquid phases then temperature and pressure would be equal in each phase, which is called boiling point

temperature. If not, boiling point temperature is taken to be the boiling point temperature of the thick liquor. Generally pure vapor above the solution is superheated because at a given pressure it condenses at a temperature below the boiling point temperature of the solution. The difference between the boiling point temperature of the solution and the condensation temperature of the vapor is called boiling point rise (BPR).

To describe evaporator operation, terms like capacity, economy and steam consumption are commonly used. Capacity is the amount of solvent evaporated per hour. Steam economy (SE) is the total amount of solvent vaporized per amount of steam fed to evaporator system. Steam consumption (SC) is the amount of steam fed to the system per hour.

In 1845, African-American engineer Norbert Rillieux patented the revolutionary process which later converted into multiple effect evaporation which consumes minimum amount of live steam and its steam economy is greater than one. As per the thumb rule the SE of the multiple effect evaporator (MEE) system is N*0.8 where N is the number of effects in evaporator system (Kern, 1950). Many researchers have tried to develop strategies to increase the steam economy (SE) of an evaporator systems either by developing new type of evaporators or by increasing number of evaporators in the system, selecting the different operating configurations like different flow sequences of the liquor including steam splitting, feed flashing, product flashing, condensate flashing, vapor bleeding, employment of reheaters to preheat the liquor.

With the development of falling film evaporator which works under low temperature difference and provides scope to accommodate more number of evaporators within the maximum available ΔT to boost the SE of the evaporator system, more and more Indian pulp an d paper industry have started inducting these evaporators into their evaporator house. Out of these many industries are using complete set of falling film evaporators and others are using a mixture of long tube vertical (LTV) and falling film evaporators. Recent investigations suggest that falling film technology may effectively minimize black liquor fouling and improve productivity.

Mathematical models of multiple effect evaporator (MEE) systems have been developed by Kern (1950), Holland (1975), and Lambert et al (1987). These models are generally based on set of linear and non-linear equations. They solved these equations using numerical methods.

1.1 OBJECTIVE OF THE THESIS

Based on the approach of Holland, the present work has been done with the following objectives:

- To develop Mathematical models for different feed configurations with inclusion of different correlations for boiling point rise (BPR), specific heat capacity (Cp) and overall heat transfer coefficient (OHTC).
- To compare the results obtained from the simulation and data obtained from nearby paper mill.
- To study the effect of SC, SE and X_P with variations in operating variables.
- To study the effect of SC, SE with the use of reheaters at appropriate places in the feed flow sequence.

1.2 ORGANISATION OF THESIS:

This thesis has been organised in six chapters. Chapter 2 describes the mathematical models available in literature related to MEE systems. Chapter 3 describes the process description of the Kraft process and physico-thermal properties of the black liquor and water and different operating parameters and different feed flow sequences. Chapter 4 presents the mathematical model and solution technique. Results and discussions are given in chapter 5 and chapter 6 highlights the main conclusions and recommendations for future work.

CHAPTER 2

LITERATURE REVIEW

Literature review on different aspects of the multiple effect evaporator (MEE) system has been reported in this chapter. Though the research on evaporator started in 1854, it appears first paper related to mathematical modelling of the MEE system appeared only in the year 1928 since then many investigators have published on different aspects of it such as mathematical modelling, design, optimal number of effects, optimal feed flow sequence. As all simulation and design work utilizes the physical properties of the fluids, which is black liquor in this case, literature related to physico-thermal properties of the black liquor has been incorporated in chapter 3. Steady state simulation of an evaporator body is generally modelled using five equations namely overall mass balance (OMB), component mass balance (CMB), energy balance (EB) around the evaporator body, energy balance on the steam side and heat transfer rate equations. The energy balance contains overall heat transfer coefficient (OHTC) of the effect, which exists between the steam chest and liquor of an evaporator.

Badger and McCabe (1936), Kern (1950) proposed steady state model of an evaporator body based on energy balance, mass balance, and heat transfer rate equations. They formulated their models based on negligible boiling point rise (BPR) and constant OHTC.

Holland (1975) developed two different models for the design and analysis of an evaporator body which is referred as Holland-1 and Holland-2. Holland-1 was developed using five equations such as OMB, CMB, and EB around the evaporator body, energy balance on the steam side and heat transfer rate equations .these equations were based on negligible BPR and constant OHTC. Holland further reduced the above five equations into three equations namely CMB, EB and heat transfer rate equations. This model required input parameters such as F, X_F, x_P, T_F, T_0, P_0, P_L (or T_L) and U to predict the heat transfer area of an evaporator body. Whereas Holland-2 was developed based on the equations used in Holland-1 plus correlations for BPR. These equations were finally reduced to four equations namely CMB, EB, heat transfer rate equations and BPR. In this model there is a provision to include variation in physical properties by including physical property based models. When the models for BPR, physical properties and OHTC, all the above three or any of these three are

included in the model, it converts the model to a nonlinear model. For Holland-2 the input parameters are F, X_F, T_F, T_0, P_0, P_L (or T_L), U, A and the output parameter is xp (final concentration). Based on the approach of Holland many investigators developed nonlinear models for an evaporator body by considering the empirical models for BPR and physical properties of the liquor. A brief literature review of other investigators is given below.

Stewart and Beveridge (1977) developed a steady-state cascade simulation in multiple effect evaporation for backward feed. This model has been designed to operate with user-provided effect models of varying degrees of sophistication. The algorithm is based on the simultaneous solution of linearised forms of the effect models derived from knowledge of the significant factors determining their performance. The coefficients of these linear equations are derived directly from the non-linear effect models without recourse to any perturbation or numerical differentiation process. Two linearisations are described, the first being adequate for lumped parameter effect models and the second for detailed effect models with strong interaction between the two-phase fluid flow and heat transfer phenomena.

Edwards et al (1977) worked on evaluation of the operating status of an existing evaporator plant (110 t/hr capacity) was greatly simplified by using the modular simulation system, GEMS. The performance of each effect was determined from easily acquired mill data such as vapor temperatures and the dissolved solids concentration entering and leaving the plant. Parallel effects on the steam side presented no calculation problems. Modification of the existing evaporator plant by addition of another effect of equal area resulted in an increase in steam economy from 4.9 to 5.6 with little change in the capacity. Doubling the area of the additional effect resulted in a discharge concentration of 54. 1%, a 4. 5% increase in capacity. New technology such as vapor recompression and blow heat recovery was easily evaluated. An analysis of vapor recompression showed a steam economy of 8. 2 when concentrating a stream from 13. 9% to 18. 3% solids.

Radovic et al (1979) developed a mathematical model for design and analysis of a five-effect evaporator system, commonly used in the sugar industry. The model consists of four equations per evaporator: (1) the enthalpy balance, (2) the heat transfer rate, (3) the phase equilibrium relationship, and (4) the mass balance equation. An iterative FORTRAN program, developed on the basis of the model proposed above, is employed in two modes of operation. The first one calculates the steam consumption, the heat transfer surface, and the

distribution of temperature, composition, and mass flow rates, to give a desired exit composition of the solution. The second one can be used to calculate all the necessary process parameters of an existing industrial evaporator system.

Nishitani and Kunugita (1979) proposed a model based on four equations namely OMB, CMB, EB and heat transfer rate equation. In their model the equations for energy balance on steam side was merged in the energy balance (EB) equation. They used an empirical model for OHTC based on operating data of the plant. They studied on a triple effect evaporator(TEE) system with forward feed flow sequence(FFFS),backward feed flow(BFFS) and mixed feed flow sequence(MFFS) used for concentrating milk. The model was formed using set of twelve equations and was solved iteratively.

Ayangbile et al (1984) developed a generalised steady-state cascade simulation algorithm in multiple-effect evaporation. The algorithm, capable of handling any feed arrangement, includes heat recovery features such as liquor and condensate flash units and feed preheating. This is made possible by the use of composite flow fractions which fully describe the internal flow connections. The decomposition approach used allows a range of module models to be utilised, depending upon the relevant design information available, backed by sub-routines of realistic physical and thermodynamic process and material properties. Given such mathematical models, the generalised algorithm presented has been developed, capable of efficiently simulating multiple-effect evaporator systems, regardless of their process feed arrangement and interconnection of effects and heat recovery units. Convergence is effective.

Lambert et al (1987) developed four different mathematical models for four different five effect evaporator systems to concentrate sodium hydroxide solutions using a BFFS. A set of twenty non-linear equations governing the multiple effect system was developed and presented a calculation procedure for reducing this system to a linear form and solved iteratively by Gaussian elimination technique. Boiling point rise and non-linear enthalpy relationships in temperature and composition were included. The results of linear and non linear techniques were compared.

Pares (1990) described on representation of the behaviour of multiple-effect black-liquor evaporators. A process simulator was used to represent the response of a multiple-effect black-liquor evaporator to changes in the heat-transfer surfaces. Operating pressure (OP) was

found to be a function of the heat-transfer capacity of each stage. Although the operator could not adjust OP, it did provide some indication of dirt build up on the heat-transfer surfaces. Simulations involving several evaporators are a valuable tool for optimization and remodelling studies in addition to providing insights into the operation of such systems.

Singhal and Bansal (1992) studied on Analysis and Simulation of a Multiple-Effect Evaporator System. A multiple effect evaporator system is developed and analyzed to achieve a reduction in energy. The system was examined for feed sequences, feed steam temperature, condenser temperature, and feed and product black liquor concentrations. The results showed that the evaporator system could be simulated, steam economy improved, and steam consumption reduced.

Agarwal et al (1992, 2004) investigated the evaporation of water from caustic soda solution using FFFS and mixed flow sequence and extended his work to four and five effect evaporator for concentration of sugar and black liquor solutions respectively. Using equations of material and energy balance, heat transfer rate and boiling point, a mathematical model of multiple effect evaporator systems with various feed arrangements has been developed. It has been solved by the application of Newton-Raphson method to determine flow rate of liquid and vapour streams, temperature and concentration in each effect of the evaporator. The model has been tested for solute concentration, liquor temperature and vapour temperature in each effect against the industrial data of a few typical mills of sugar, caustic soda and pulp and paper.

Bremford and Muller-Steinhagen (1994, 1996) investigated two evaporator systems one having six effects and other with seven effects used for concentration of black liquor using backward feed flow sequence (BFFS). They also incorporated feed, product flashing, condensate flash, feed and steam splitting and reheaters in their model and solved iteratively.

Zain and Kumar (1996) investigated on simulation of multiple effect evaporators for concentrating caustic soda solution. Computational aspects associated with numerical solution of model equations of the triple effect evaporator system by Newton Raphson method have been studied. A new arrangement of model equations is also proposed, which reduces the number of equations from 12 to 5 and posses several distinct computational advantages over the previous arrangement. The conclusions are general and may also be applied to the simulation of other multiple effect evaporator systems.

Ray and Singh (2000) investigated on Simulation of multiple effect evaporator for black liquor concentration. An attempt has been made to design a sextuple effect black liquor evaporator system for paper industry. They developed a system of 12 nonlinear simultaneous equations based on steady state mass and energy balances, heat transfer rate, equilibrium relationships and same physico-chemical/physico-thermal properties of liquor. Numerical techniques using Newton-Raphson-Jacobian matrix method and method of Gauss elimination are employed to solve the problem. A generalised algorithm is developed for the simulation of this multiple effect evaporator systems with backward feed. To process a large body of data within limited time and to generate a data bank a computer program has been developed based on Fortran 77. Normal parameters practiced in Industry are employed to simulate the system. Anticipated saving of steam consumption is indicated. The design procedure developed can bring accuracy in assessing the performance of an existing evaporator system or can help in designing a new system for pulp and paper mill.

Ray et al (2001) extended their work including the effect of splitting of feed and flash utilization. A generalized algorithm for design and simulation of black liquor multiple effect evaporator system (MEE) with a typical backward feed sequence is extended for backward feed sequence involving splitting of feed and distributing equally the same to the last two bodies of the set and the results of the two sequences are compared. The resulting algorithm appears to be newer for rapidity of convergence and estimates the energy consumption more accurately and efficiently.

Ray and Sharma (2004) investigated on Simulation of multi-effect evaporator for paper mill-effect of flash and product utilization for mixed feeds sequences. A generalized algorithm was developed for design and simulation of long tube black liquor multiple effect evaporator system (MEE) with mixed feed sequence in pulp and paper industry. They concluded that for mixed feed with condensate and product flash has additional advantages of energy gains and higher steam economy in mixed feed sequence. Models are based on steady state mass balance, enthalpy balance and heat transfer rate equations interlinked with over all heat transfer coefficient obtained from Gudmundson's model (1972) and suitable correlations of physico- thermal properties of black liquor as well as the BPR values as a function of temperature and concentration. A program is developed in FORTRAN- 77 language. The numerical technique used is Newton- Raphson method with Jacobian matrix and methods of Gauss Elimination with partial pivoting supplemented with LU decomposition with the aid of Hubert Norms.

Ray et al (2004) investigated on estimation of energy gains through modelling and simulation of multiple effect evaporator system in a paper mill. Comparison between split feed with and without condensate flash and product flash are attempted. The models were based on steady state mass balance, enthalpy balance and heat transfer rate equations interlinked with overall heat transfer coefficient obtained from Gudmundson's model (1972) and suitable correlations of physicothermal properties of black liquor as well as the BPR values as a function of temperature and concentration. A program was developed in FORTRAN-77 language. The numerical techniques used is Newton-Raphson method with Jacobian matrix and method of gauss elimination with partial pivoting supplemented with LU decomposition with aid of Hilbert norms. The gains in SE, reduction in SC and area requirement are quantitively estimated. Anticipated steam saving is citied.

Jancew-Cudier and Olivera-Fuentes (2004) developed a simplified and generalized method to size multiple effect Evaporator systems with any feed scheme. An iterative procedure for the design of multiple-effect evaporator systems with backward feed is simplified and generalized for any liquid flow feed arrangement. In the original method, an evaporator train of N effects is described by 3N + 4 algebraic equations that include mass and energy balances, heat transfer rates, and specifications of external feed flow rate, temperature and composition, final product concentration, and steam and vacuum pressures. Using estimated temperatures and enthalpies, this set is linearized and solved for the liquid and vapor flows by standard algorithms. The results are then used to recalculate the thermodynamic properties, and the procedure is repeated to convergence. The sub-system of heat transfer equations were solved separately from the mass and energy balances, and that this solution is explicit and independent of the liquid flow scheme. This generates a simpler set of equations and substantially reduces the computational cost. Generalization is then achieved by introducing a connectivity matrix that can describe any possible liquid flow arrangement, including forward, backward and mixed feed schemes. Solution follows the original method, but with initial values obtained from an exact solution based on neglecting boiling point rise Two implementations of the new method are presented: an Excel™ spreadsheet for triple-effect systems that is used to validate the results by comparison to standard textbook examples, and an interactive Visual Basic application that can size evaporator systems of up to 20 effects.

Durmus Kaya and Ibrahim Sarac (2007) developed a mathematical model for multiple-effect evaporators. These evaporators have co-current, counter-current and parallel flow

operation options. Each operation was investigated with and without pre-heaters. The effect of pre-heating on evaporation process was investigated from the point of energy economy. A sugar factory's data was used with the applied models as a case study. The results obtained for pre-heated and non-pre-heated situations were compared with each other. The maximum COP is found as 3.33 for counter current operation with pre-heating. The minimum COP is 2.57 for parallel flow operation without pre-heating. The best operation for economic steam consumption is counter current operation with pre-heating while the worst case is parallel flow operation without pre-heating.

Bhargava et al (2007) developed a nonlinear model for a SEFFFE system employed for concentrating weak black liquor in an Indian Kraft Paper Mill. The system incorporates different operating strategies such as condensate-, feed- and product-flashing, and steam- and feed-splitting. This model is capable of simulating a MEE system by accounting variations in τ, U, Q_{loss}, physico-thermal properties of the liquor, **F** (feed flow sequence) and operating strategies. The developed model is used to analyze six different **F** including backward as well as mixed flow sequences. For these **F**, the effects of variations of input parameters, T_0 and F, on output parameters such as SC and SE have been studied to select the optimal **F** for the complete range of operating parameters. Thus, this model is used as a screening tool for the selection of an optimal **F** amongst the different **F**. An advantage of the present model is that a **F** is represented using an input Boolean matrix and to change the **F** this input matrix needs to be changed rather than modifying the complete set of model equations for each **F**. It is found that for the SEFFFE system, backward feed flow sequence is the best as far as SE is concerned.

CHAPTER 3

PROCESS DESCRIPTION AND PHYSICAL PROPERTIES OF BLACK LIQUOR

Manufacturing of paper and paper products is a complex process which is carried out in two distinct phases:

- Pulping of the wood and
- Manufacture of the paper.

Pulping is the conversion of fibrous raw material, wood, into a material suitable for use in paper, paperboard, and building materials. The fibrous material ready to be made into paper is called pulp. There are four major chemical pulping techniques: (1) Kraft or sulfate, (2) sulphite, (3) semi chemical, and (4) soda.

3.1 KRAFT PULPING PROCESS:

Kraft or sulphate process is the currently dominant chemical pulping process. Pulp wood can be considered to have two basic components, cellulose and lignin. The fibers of cellulose, which comprise the pulp, are bound together in the wood by the lignin. To render cellulose usable for paper manufacture, any chemical pulping process must first remove the lignin. The Kraft process for producing pulp from wood is shown in Figure. In the process, wood chips are cooked (digested) at an elevated temperature and pressure in "white liquor", which is a water solution of sodium sulfide (Na_2S) and sodium hydroxide (NaOH). The white liquor chemically dissolves lignin from the wood. The remaining cellulose (pulp) is filtered from the spent cooking liquor and washed with water. Usually, the pulp then proceeds through various intermittent stages of washing and possibly bleaching, after which it is pressed and dried into the finished product (paper).

The balance of the process is designed to recover the cooking chemicals and heat. Spent cooking liquor and the pulp wash water are combined to form weak black liquor which is concentrated in a multiple-effect evaporator system to about 55 percent solids. The black liquor can then be further concentrated to 65 percent solids in a direct-contact evaporator, which evaporates water by bringing the liquor in contact with the flue gases from a recovery furnace, or in an indirect-contact evaporator. The strong black liquor is then fired in a recovery furnace. Combustion of the organics dissolved in the black liquor provides heat for

generating process steam and converting sodium sulphate (Na_2S0_4) to Na_2S. To make up for chemicals lost in the operating cycle, salt cake (sodium sulphate) is usually added to the concentrated black liquor before it is sprayed into the furnace. Inorganic chemicals present in the black liquor collect as a molten smelt at the bottom of the furnace. The smelt, consisting of sodium carbonate (Na_2C0_3) and sodium sulfide, is dissolved in water to form green liquor which is transferred to a causticizing tank where quicklime (CaO) is added to convert the sodium carbonate to sodium hydroxide. Formation of the sodium hydroxide completes the regeneration of white liquor, which is returned to the digester system. A calcium carbonate mud precipitates from the causticizing tank and is calcined in a lime kiln to regenerate quicklime.

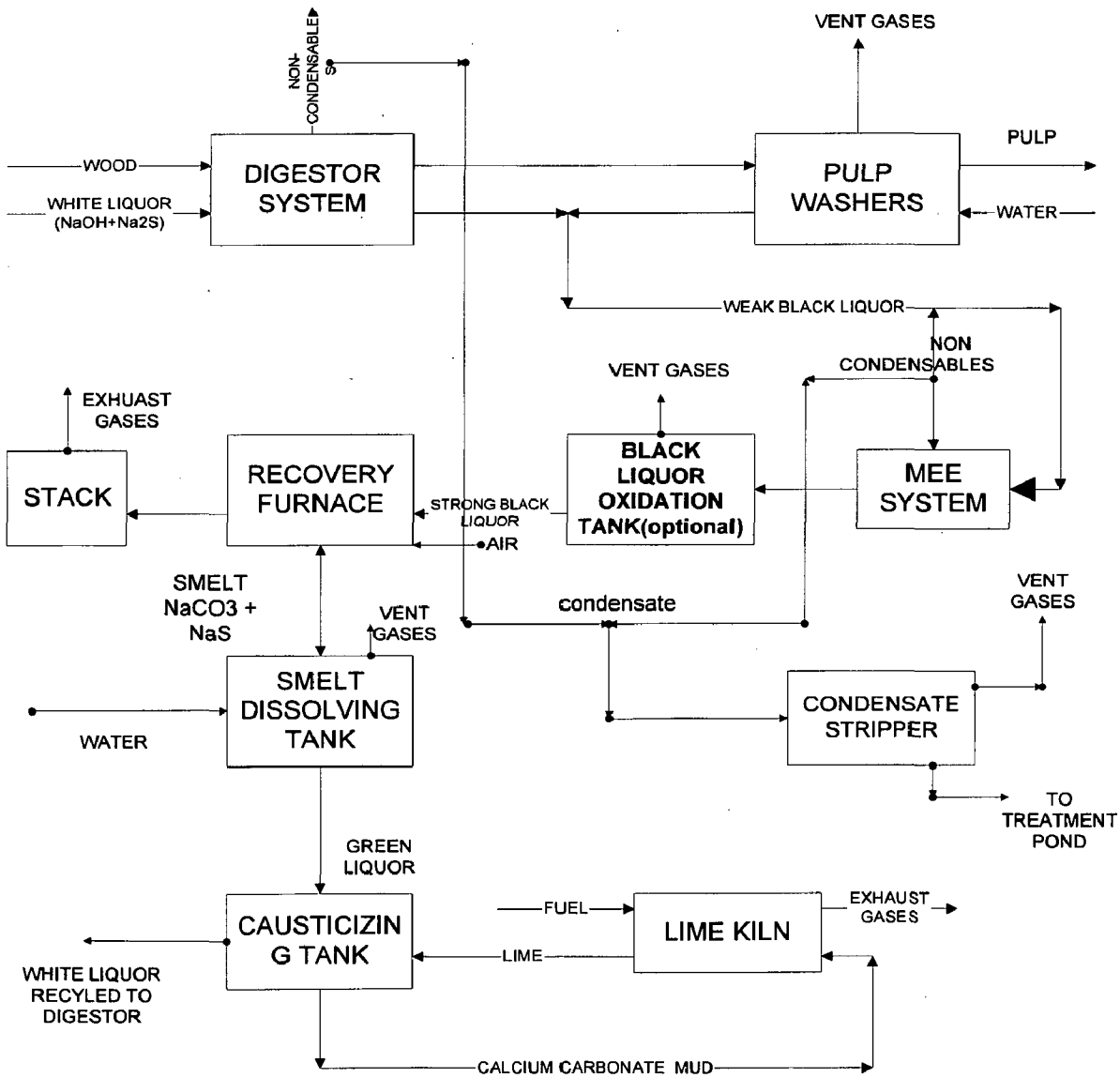

Fig 3.1: Process flow diagram for Kraft process

3.2 OPERATIONAL FEATURES OF BLACK LIQUOR:

The process of evaporation requires a large amount of energy which is supplied by the latent heat of vaporization from saturated steam. In paper industry multiple effect evaporator deals with concentration of black liquor from Kraft mill after blow tank, before combustion of black liquor for energy and chemical recovery for the plant takes place. The black liquor is a complex organic-inorganic solution having solid content ranging from 10-20%.however overwhelmingly majority of the cases, the dissolved solids content centres around 15% for wood and bamboo based liquors. A typical set of data of the composition of weak Kraft black liquor in Indian pulp mills is given in **table 3.2.1**

The liquor is corrosive due to sulphur based compounds viscous, foaming, scaling and strongly ionic. It has also very high boiling point rise values. At high concentration the black liquor exhibits Non-Newtonian flow characterstics. It is required to concentrate the liquor up to 60-65% solids before its combustion in the furnace. During the evaporation process the various physico-chemical properties are changed because of increase in concentration and change in temperature.

Table 3.1: Weak Kraft Black Liquor Constituents

Organic_compounds:

Sl.No	Organic compounds
1.	Ligneous materials(polyaromatic in character)
2.	Saccharinic Acids (Degraded carbohydrates)
3.	Low molecular weight organic acids
4.	Sugars, Resin and Fatty Acid Soaps

Inorganic_compounds:

Sl. No	Inorganic compounds	kg/m^3
1.	Sodium hydroxide	4-8
2.	Sodium sulphide	6-12
3.	Sodium thiosulphate	1.2
4.	Sodium carbonate	6-15
5.	Sodium sulphate	0.5-1.0

6.	Sodium Sulphite	small
7.	Sodium polysulphides	small
8.	Elemental sulphur	small

3.3 PHYSICAL PROPERTIES OF BLACK LIQUOR AND WATER:

To formulate material and energy balance in each body of multiple effect evaporator system physical properties of black liquor are needed. These physical properties are the explicit function of concentration of both the organic and inorganic constituents of black liquor as well as temperature. These properties change with the variation of the temperature and pressure from first to last effect and also from bottom to the top of each effect of multiple effect evaporator system. Therefore to study the dependency of physical properties on the temperature and concentration is very important.

The important physical-chemical/ physical-thermal properties of black liquor are: density (ρ), specific heat (Cp), Boiling Point Rise (BPR), and Latent heat of vaporization (λ). Some of the important properties are given below in details.

3.3.1 DENSITY:

3.3.1.1 Density of Black Liquor (ρ):

Density of black liquor varies with raw material, concentration, temperature and ratio of organic to inorganic constituents. Higher temperature and lower inorganic matter decrease the density values. The effect of temperature on density of black liquor is usually neglected compared to the effect of changes in solid content. Regestad (1951) has presented following useful expression relating the density of black liquor to solid content.

$$\rho = 1007 + 6.0(T.S) - 0.495T \tag{3.1}$$

Where T.S. = Total solids % and T is in K.

One another empirical equation (Johan) for estimation of density is as following:

$$\rho_{25} = 997 + 649X \tag{3.2}$$

ρ is liquor density at 25°C,

For estimation of density at any temperature the following correlation is given:

$$\frac{\rho_T}{\rho_{25}} = 1.008 - 0.237T/1000 - 19.4\left(\frac{T}{100}\right)^2 \tag{3.3}$$

Where 'T' is black liquor temperature in ^{0}C

and 'ρ' is in kg/m^3

Koorse et al (1975) have calculated experimentally the density or specific gravity of black liquors obtained from pulping of fibrous raw materials such as bamboo, bagasse, salai, eucalyptus and mixed hardwoods, using commercial samples and the results have been presented in graphs with concentration as a parameter, correlating at 70°C. Black liquor from bamboo, eucalyptus, mixture of bamboo and salai and bagasse show increasing specific gravity in that order, Graphical presentation of the data of specific gravity is given by Hultin (1968) which can be calculated by the following relations.

For dry solids content

$$TS = 177 * (\rho_{90^\circ C} - 963) \qquad \text{(TS = 10-25\%)} \tag{3.4}$$

$$TS = 146 * (\rho_{90^\circ C} - 920) \qquad \text{(TS = 50-65\%)} \tag{3.5}$$

3.3.2 SPECIFIC HEAT:

3.3.2.1 Specific Heat Of Black Liquor, (C_P)

Specific heat of black liquor, C_p, is a function of solid content and temperature. The heat Capacity of black liquor is a decreasing function of the solids concentrations and a slowly increasing function of temperature. The variation of heat capacity with temperature increases as the solids concentration is increased (Zaman et al (1996)).

The heat capacity of black liquors at concentrations is given as

$$C_P = (a + bT) \qquad (< 100\% \text{ solids}) \tag{3.7}$$

$$C_P = (a + bT + cT^2) \qquad (> 100\% \text{ solids}) \tag{3.8}$$

Where Cp is the heat capacity (kJ/kg/K), T is temperature (K), and a, b are constants that are concentration dependent.

Veeramani (1978, 1982) has proposed the following equation for specific heat of non-wood black liquors.

For bamboo and pine black liquor:

$$C_P = (1.8*10^{-3}T - 0.54)*10^{-2}(T.S) + 1.0 \tag{3.9}$$

For bagasse and straw black liquors:

$$C_P = (1.04*10^{-3}T - 1.26)*10^{-2}(T.S) + 1.0 \tag{3.10}$$

The dependence of specific heat of Kraft black liquor on total solids content of the liquor as suggested by Regestad (1951) is

$$C_P = 4187*(1 - 0.0054(T.S)) \tag{3.11}$$

Hultin (1968) has proposed the following equation for specific heat

$$C_P = 0.96 - 0.45*10^{-2}(T.S) \tag{3.12}$$

In the absence of actual data the following approximation has been recommended in TAPPI monograph (Grace and Malcolm)

$$C_P = 1.0 - (1 - C_{P,S})*10^{-2}(T.S) \tag{3.13}$$

Where $C_{P,S}$, specific heat of black liquor solids and its value is assumed to be in the range of 0.3-0.5 kcal/kg ^{0}c.

The heat capacity for slash pine black liquor can be determined from Zaman et al. (1995):

$$C_P = 3.98 + 6.19\times10^{-4}T + (C + DT)X \tag{3.14}$$

where C_p is in kJ/kg/K, T is in K, and C and D are composition-dependent constants that have been correlated to the pulping conditions for the liquors

Koorse et al. (1977) used the following model to define the heat capacity data for bamboo, bagasse, and eucalyptus black liquors:

$$C_P = 1 + (a + bT)(T.S) \tag{3.15}$$

where a and b are the constants and vary from liquor to liquor. This equation does not take the temperature dependency of the heat capacity as the solids concentration (T.S) approaches zero

Harvin and Brown (1953) correlated the heat capacity data of pine black liquors using

$$C_P = (0.99 - 0.639 * (T.S)) + (1.44 \times 10^{-4} + 11.52 \times 10^{-4} (T.S))T \tag{3.16}$$

Where C_P is in kcal/kg/^{0}c and T is temperature in ^{0}C.

3.3.3 BOILING POINT RISE (BPR):

To calculate the effective temperature drop in each stage of multiple effect evaporator boiling point rise (BPR) plays an important role. The boiling point rise is the difference between the boiling temperature of black liquor and that of pure water at the same pressure. Boiling point rise is smaller at lower concentration and increase with increase in solid content. In fact, it is a strong function of solids content of black liquor while it is a very weak function of pressure and hence temperature. An increase of 1°C in saturation temperature due to increase in saturation pressure results in about 0.6 % rise in boiling point rise. Hultin (1968) has reported the boiling point rise as a function of solid content (TS) as follows:

$$\text{BPR} = \text{K}\ [(\text{TS})/\ \{100 - (\text{TS})\}] \tag{3.19}$$

Where K is a constant BPR for 50 % solid content; K varies between 5 and 8° C typically for various species. The fraction [(TS)/ {100- (TS)}] is the solid to water ratio in the black liquor. Above about 50% solids, sodium carbonates and sodium sulphate begin to precipitate out of black liquor and the BPR begins to rise less steeply. This has been reported by Frederick et al (1980). The terms Apparent BPR, True BPR, Effective BPR, and Excess BPR are defined by Kumana et al (1990). The term excess boiling point rise represents the amount of liquid superheat, over and above that caused by the presence of dissolved solids. Forced circulation evaporators are routinely designed with the liquor being introduced under the liquid surface in the body. This can result in liquid superheat. Excess BPR due to liquid superheat is more widely prevalent than generally recognized.

The TAPPI correlation (Ray et al, 1992) for BPR is

$$BPR = 23 * (0.1 + (T.S))^2 \tag{3.20}$$

The boiling point elevation of each slash pine Kraft black liquor as a function of solids mass fraction and pressure can be defined as

$$BPR = (a + bP)(S/(1-S)) \qquad S < 65\% \tag{3.21}$$

$$BPR = (a + bP)(S/(1-S)) + (c + dP) \qquad S \geq 65\% \tag{3.22}$$

Where a, b, c, d are constants which are concentration dependent,

S-solids mass fraction, and

Pressure (P) is in mm Hg

3.3.4 OTHER PROPERTIES OF WATER AND STEAM:

3.3.4.1 Latent Heat of Vaporization of Water, (λ):

For striking enthalpy balance around different effects of evaporator, the temperature dependence of latent heat of vaporization, saturation pressure of water, enthalpy of saturated water(h_s) and enthalpy of saturated steam (H_s) are required. All of these can be taken from Steam Table, Applying least square method; the final equation (Mathur, 1992) is modelled as follows:

$$\lambda = 2519.5 - 2.653 \times T \tag{3.23}$$

Where T is in °C and λ in kJ/kg.

Another equation for latent heat of vaporization is given as

$$\lambda = 2496 - 2.026 \times T - 0.003674 \times T^2 \qquad (R^2 = 0.9997) \tag{3.24}$$

Where T is in °C and λ in kJ/kg.

3.3.4.2 Enthalpy of Saturated Steam/Vapor:

Enthalpy of saturated steam can be obtained from the following equation

$$H_s = \gamma T + \delta \tag{3.25}$$

where $\gamma = 1.617$ and $\delta = 2509$ and T is in ^{0}C

3.4 OPERATION OF MULTIPLE EFFECT EVAPORATOR SYSTEMS

3.4.1 Forward Feeding:

This is the simplest and so the most common form of feeding. Feed passes in the same direction as the vapours, namely from the first effect to the second effect, to the third and so on. An extraction pump only is required, the final effect being operated at low pressure. With this arrangement the viscosity of the process liquor increases during passage through the plant owing to both an increase in concentration and reduction in temperature. Thus the overall heat transfer coefficient is low in the later effects. However less heat damage may occur as a result.

High quality steam condenses in the first effect calandria. If the initial feed is below its boiling point some of the heat must be transferred must be used for pre-heating the feedstock. Since less heat is available for vaporisation, less vapour condenses in the second effect and this pattern is repeated in later effects. The overall result is a loss in steam economy.

3.4.2 Backward feeding:

Interstage pumps are required for this arrangement. Dilute, cooler feed liquor meets poorer quality steam since steam and liquor flows are counter current. An improvement in steam economy results. The increase in viscosity is offset by the higher temperatures encountered. Care must be taken to overcome localised overheating.

3.4.3 Mixed feeding:

This method is common with a larger number of effects. It represents a compromise between the simplicity of forward feeding and the greater economy of backward feeding. The method is very useful with very viscous liquids and is recommended when large increases in viscosity with concentration are likely.

3.4.4 Parallel Feeding

In crystallizing evaporators, where slurry of crystals and mother liquor is withdrawn, feed may be admitted directly to each effect. In parallel feed there is no transfer of liquid from one effect to other.

3.5 Variations of operating parameters in a SEFFFE system:

In the present investigation the range of operating parameters considered are given below:

Table 3.2: variations in value of operating parameters

S.No.	Parameters	Variation in value considered
1	Steam temperature(T_0)	130 ^{0}C -150 ^{0}C
2	Inlet liquor concentration(X_F)	8%-15%
3	Last effect(7th) temperature(T_L)	46 ^{0}C-58 ^{0}C
4	Liquor feed temperature(T_F)	84.7 ^{0}C- 44.7 ^{0}C
5	Liquor feed rate(F)	18.611-15.611 kg/s

3.6 LIQUOR FLOW SEQUENCE:

Due to the physico-thermal properties and behaviour of organic and inorganic compounds present in black liquor which changes with temperature and concentration of liquor, SEFFFE uses backward feed and mixed flow sequences. Different types of flow sequences which are considered in the present investigation are given in the table

Table 3.3: Different flow patterns of liquor

Sequence no.	Liquor flow sequence	Remarks
S1	$7 \rightarrow 6 \rightarrow 5 \rightarrow 4 \rightarrow 3 \rightarrow 2 \rightarrow 1$	Backward feed to 7th effect and steam split in 1st and 2nd effects
S2	$6 \rightarrow 7 \rightarrow 5 \rightarrow 4 \rightarrow 3 \rightarrow 2 \rightarrow 1$	Mixed feed to 6th effect and steam split in 1st and 2nd effects
S3	$5 \rightarrow 6 \rightarrow 7 \rightarrow 4 \rightarrow 3 \rightarrow 2 \rightarrow 1$	Mixed feed to 5th effect and steam split in 1st and 2nd effects
S4	$4 \rightarrow 5 \rightarrow 6 \rightarrow 7 \rightarrow 3 \rightarrow 2 \rightarrow 1$	Mixed feed to 4th effect and steam split in 1st and 2nd effects
S5	$3 \rightarrow 4 \rightarrow 5 \rightarrow 6 \rightarrow 7 \rightarrow 2 \rightarrow 1$	Mixed feed to 3th effect and steam split in 1st and 2nd effects

The effects are numbered according to the flow sequence of liquor. Live steam is fed into 1st effect (in general first two effects), which operates at highest pressure whereas last effect which is attached to the vacuum unit (lower pressure).Other effects operate within these two

pressure levels. The pressure levels decrease progressively, when one moves from first effect to last effect.

3.7 SELECTION OF THE EQUATIONS FOR FINDING VARIOUS PROPERTIES OF BLACK LIQUOR AND WATER

Different correlations for calculating the various physical properties of black liquor and water are chosen. The correlations which are used in the present mathematical model are given below

Table 3.4: correlations used in the present investigation.

S.NO	PROPERTIES	CORRELATIONS
1	Boiling point rise	$BPR = 19.6299 * (0.1 + (T.S))^2$
2	Specific heat capacity	$C_P = 4187 * (1 - 0.0054(T.S))$
3	Latent heat of vaporization	$\lambda = 2496 - 2.026 \times T - 0.003674 \times T^2$
4	Enthalpy of saturated vapor/steam	$H_s = \gamma T + \delta$ where $\gamma = 1.617$ and $\delta = 2509$
5	Overall heat transfer coefficient	$U = 199.8535 * (\Delta T)^{-0.3717} * (X_{avg})^{-1.2273} * F_{avg}^{0.0748}$ $U = 3058.5638 * (\Delta T)^{-0.7949} * F_{avg}^{0.1673}$ 1st eqn for effects 1&2 and 2nd eqn for other effects

MATHEMATICAL MODELLING

The concept of evaporator body was first introduced by an African-American engineer Norbert Rillieux in 1845.However, the mathematical modelling for its design started in 1928 with the work of Badger. Since then many investigators have proposed mathematical models for evaporators. Steady state simulation of an evaporator body is modelled using five equations namely overall mass balance, component mass balance, energy balance around the evaporator body, energy balance on the steam side and heat transfer rate equations. The energy balance equation contains the overall heat transfer coefficient (OHTC) of the effect, which exists between the steam chest and liquor of an evaporator body. Holland developed two different models for design and analysis of an evaporator body. The present mathematical model has been developed based on approach given by Holland.

4.1 EVAPORATOR MODEL:

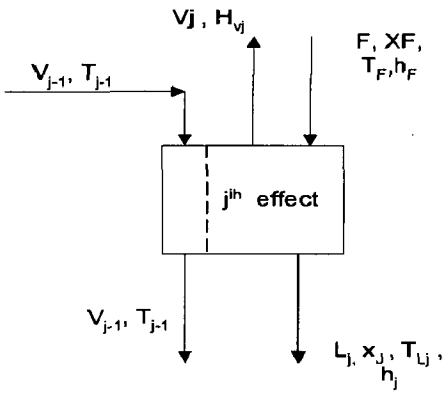

Fig 4.1: Block diagram of an evaporator body.

An evaporator body is generally modelled using five equations. By considering balances for j^{th} effect, we get the equations as follows:

Overall mass balance:

$$F = L_j + V_j \tag{4.1}$$

Where F is feed flow rate;

L_j is flow rate of liquor from effect j where (j=1 to 7);

V_j is flow rate of vapor from effect j

If feed flash is used then F= L_f (flow rate after feed flash).In this present work feed flash is not employed.

Component mass balance:

The balance for solute is given as

$$FX_F = L_j x_j \tag{4.2}$$

Where

X_F-mass fraction of the solute in the feed;

x_j- mass fraction of the liquor leaving the effect (j).

Energy balance:

An energy balance for process stream is given by

$$Fh_F(T_F, X_F) + Q_j = V_j H_{Vj}(T_{Lj}) + L_j h_j(T_{Lj}, x_j) \tag{4.3}$$

Where

T_{Lj}- boiling point of the solution.

h_F- enthalpy of the feed at temperature(T_F) and concentration(X_F)

h_j- enthalpy of the liquor leaving the jth effect, evaluated at pressure (P_j),temperature(T_{Lj}) and concentration(x_j).

H_{vj}-enthalpy of pure solvent in vapor state evaluated at P_j,T_{Lj}.

Q-rate of heat transfer across the tubes(from steam to thick liquor).

Energy balance on steam side:

$$Q = V_{j-1}\lambda_{j-1} \tag{4.4}$$

The equation for **rate of heat transfer** is given by

$$Q_j = U_j A_j \Delta T \tag{4.5}$$

Where

$$\Delta T = T_{j-1} - T_{Lj}; \qquad T_{Lj} = T_j + bpr_j$$

From eqn(4.3), adding and substracting Fh_j and by simplifying we get

$$Fh_F + V_{j-1}\lambda_{j-1} = (F - L_j)H_{Vj} + L_j h_j - Fh_j + Fh_j$$

$$F(h_f - h_j) + V_{j-1}\lambda_{j-1} - (F - L_j)(H_{Vj} - h_j) = 0$$

$$f_j = F(h_f - h_j) + V_{j-1}\lambda_{j-1} - (F - L_j)(H_{Vj} - h_j) \tag{4.6}$$

$$f_j = U_j A_j (T_{j-1} - T_{Lj}) - V_{j-1}\lambda_{j-1} \tag{4.7}$$

4.2 FEED FLASH TANK:

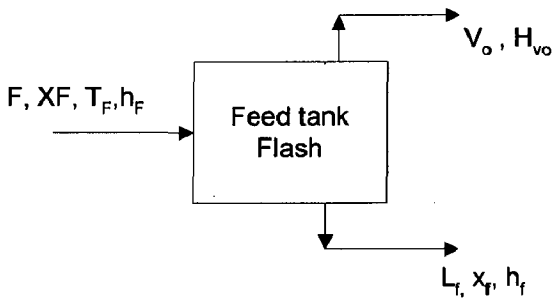

Fig 4.2: block diagram for feed flash tank

Overall mass balance:

$$F = V_0 + L_f \tag{4.8}$$

Where F-flow rate of the fresh feed(before feed flash);

V_0-flow rate of the vapor from feed flash tank.

L_f- flow rate of the liquor from feed flash tank.

Component mass balance:

The solute balance is given by

$$FX_F = L_f x_f \tag{4.9}$$

Where

X_F-mass fraction of the solute in fresh feed.

x_f-mass fraction of the solute after feed flash.

Energy balance:

$$Fh_F = V_0 H_{V0} + L_f h_f \tag{4.10}$$

By adding and substracting Fh_f and by simplifying we get

$$F(h_F - h_f) - (F - L_f)(H_{V0} - h_f) = 0 \tag{4.11}$$

4.3 PRODUCT FLASH TANK:

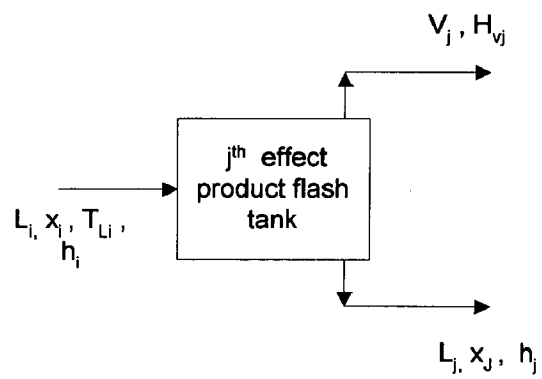

Fig 4.3: block diagram for product flash tank

Considering balances around j^{th} effect for product flash tank which is flashed at temperature T_j are given below

Overall mass balance:

$$L_i = V_j + L_j \tag{4.12}$$

Component mass balance:

$$L_i x_i = L_j x_j \tag{4.13}$$

Energy balance:

$$L_i h_i = V_j H_{Vj} + L_j h_j \tag{4.14}$$

$$L_i h_i = (L_i - L_j) H_{Vj} + L_j h_j$$

By adding and substracting $L_i h_j$ and by simplifying we get

$$L_i (h_i - h_j) - (L_i - L_j)(H_{Vj} - h_j) = 0 \tag{4.15}$$

4.4 CONDENSATE FLASH TANK:

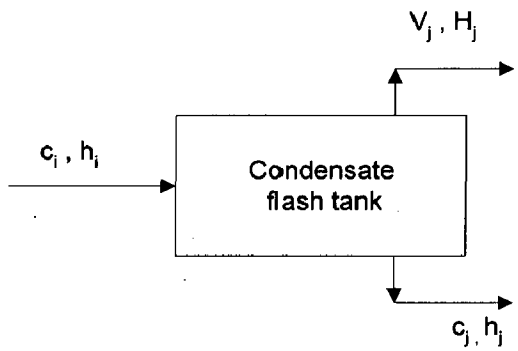

Fig 4.4: block diagram for condensate flash tank

The model for condensate flash tank based on energy and mass balance is described below:

The ith condensate stream with mass flow rate of C_i entering at the temperature T_i into j^{th} flash tank and being flashed at temperature T_j

Overall mass balance:

$$C_i = V_j + C_j \tag{4.16}$$

Energy balance:

$$C_i h_i = V_j H_{Vj} + C_j h_j \tag{4.17}$$

Substituting eqn 4.16 in 4.17 gives

$$C_i h_i = V_j H_{Vj} + (C_i - V_j) h_j$$

$$C_i (h_i - h_j) - V_j (H_{Vj} - h_j) = 0 \tag{4.18}$$

Substituting h,Hv we have

$$C_i((\alpha T_i - \beta) - (\alpha T_j - \beta)) - V_j((\gamma T_j + \delta) - (\alpha T_j - \beta)) = 0 \tag{4.19}$$

$$C_i(\alpha(T_i - T_j)) - V_j((\gamma - \alpha)T_j + (\delta + \beta)) = 0 \tag{4.20}$$

4.5 REHEATERS:

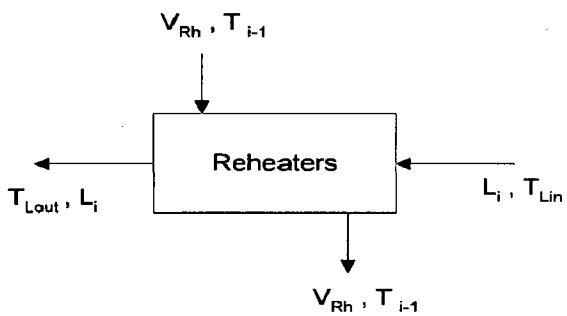

Fig 4.5: Block diagram for reheater

To increase the liquor temperature before it entered into an effect. It uses vapor of an effect as heating medium. The required amount of vapors was bled from vapor streams of the MEE system.

The target temperature from the reheaters is given by the equation

$$\tau_{Lout} = \tau_{Lin} + 0.5 * (T_{i-1} - \tau_{Lin}) \tag{4.21}$$

This eqn is taken from Bhargava (2004).

Energy balance:

$$L_i cp_i (\tau_{Lout} - \tau_{Lin}) - V_{Rh}\lambda_{i-1} = 0 \tag{4.22}$$

Substituting eqn(4.21) in eqn(4.22) we get

$$L_i cp_i * 0.5 * (T_{i-1} - \tau_{Lin}) - V_{Rh}\lambda_{i-1} = 0 \tag{4.23}$$

4.6 SCALING METHODOLOGY:

A scaling procedure is used to reduce the magnitude of the terms appearing in the functional equations and matrices. For computational purposes, it is desirable to have terms with

magnitude near unity by using parameters such as feed rate (F), steam temperature (T_0) and latent heat of vaporization of steam (λ_0).

Each functional equation was divided by the product $(F\lambda_0)$ and new functional expression was denoted by g_j

Where $$g_j = f_j/(F\lambda_0)$$

All flow rates were expressed as a fraction of feed rate (F), i.e.

$$L_j = l_j F \; ; V_j = v_j F$$

All temperatures were expressed as a fraction of the steam temperature.

$$T_j = u_j T_0$$

The area of each effect was expressed as a fraction of the term proportional to the feed rate (F). (For design problem)

$$A_j = a_j (F/50)$$

After scaling procedure has been applied, the functional expressions are stated in compact form by means of following matrix equation

$$J_k \Delta X_k = -f_k$$

Where J_k- Jacobian matrix with first order derivatives w.r to unknowns variables.

$$\Delta X_k = X_{k+1} - X_k$$

Where k+1, k denote the values in k^{th} and $k+1^{th}$ trials of the unknown variables.

On the basis of the assumed set of the values for the elements of the column vector X_k

The corresponding values of the elements of J_k and f_k are computed.

4.7 SCHEMATIC DIAGRAMS OF DIFFERENT FLOW PATTERNS CONSIDERED:

4.7.1 Backward feed sequence (7-6-5-4-3-2-1) with condensate and product flash tanks:

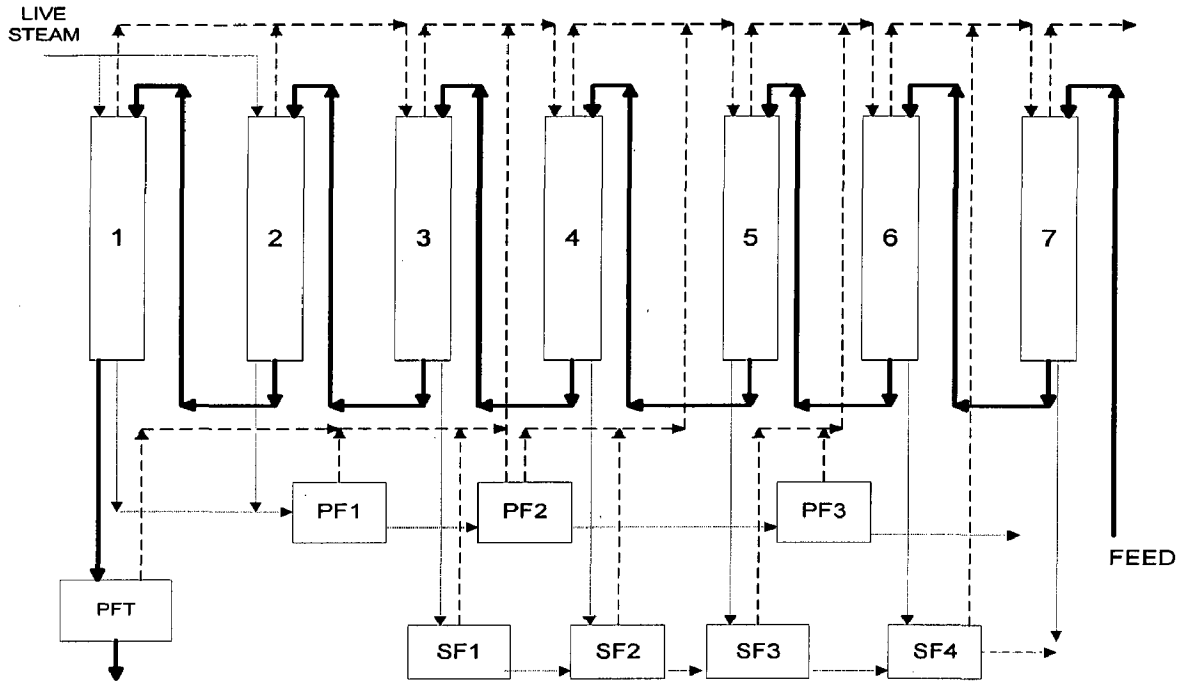

Fig 4.6: Schematic diagram of a SEFFFE system with product, condensate flashing as well as steam splitting for backward flow sequence (S1).

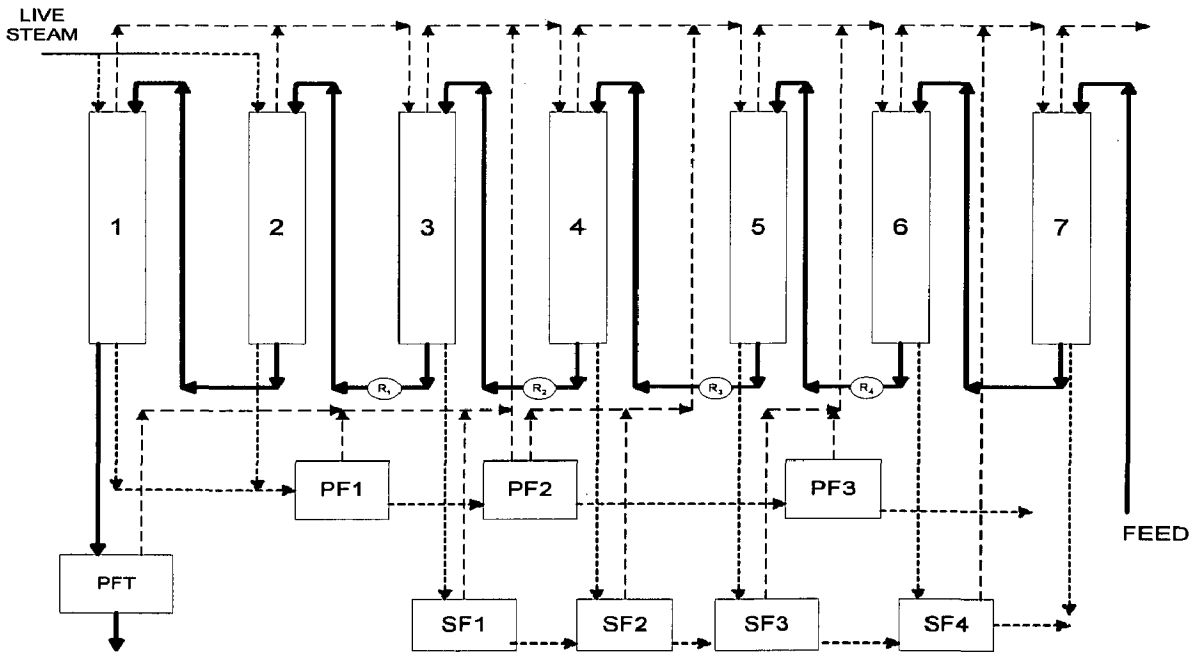

Fig 4.6.1: Schematic diagram of a SEFFFE system with product, condensate flashing as well as steam splitting and use of reheaters for backward flow sequence (S1).

The equations which represents fig 4.6 are given below:

$$g_1 = l_2T_0 / \lambda_0 * (cp_2(u_2 + bpr_2 / T_0) - cp_1(u_1 + bpr_1 / T_0)) + v_{01}$$
$$-((l_2 - l_1) / \lambda_0) * ((AT_0((u_1 + bpr_1 / T_0) + B) - cp_1T_0(u_1 + bpr_1 / T_0))$$
$$g_2 = U_1A_1T_0 / (F\lambda_0) * (1 - (u_1 + bpr_1 / T_0)) - v_{01}$$
$$g_3 = l_3T_0 / \lambda_0 * (cp_3(u_3 + bpr_3 / T_0) - cp_2(u_2 + bpr_2 / T_0)) + v_{02}$$
$$-((l_3 - l_2) / \lambda_0) * ((AT_0((u_2 + bpr_2 / T_0) + B) - cp_2T_0(u_2 + bpr_2 / T_0))$$
$$g_4 = U_2A_2T_0 / (F\lambda_0) * (1 - (u_2 + bpr_2 / T_0)) - v_{02}$$
$$g_5 = l_4T_0 / \lambda_0 * (cp_4(u_4 + bpr_4 / T_0) - cp_3(u_3 + bpr_3 / T_0)) + (l_2 - l_1) / \lambda_0 * \lambda_1$$
$$+(l_3 - l_2) / \lambda_0 * \lambda_2 - ((l_4 - l_3) / \lambda_0) * ((AT_0((u_3 + bpr_3 / T_0) + B) - cp_3T_0(u_3 + bpr_3 / T_0))$$
$$g_6 = U_3A_3T_0 / (F\lambda_0) * (u_2 - (u_3 + bpr_3 / T_0)) - (l_2 - l_1) / \lambda_0 * \lambda_1 - (l_3 - l_2) / \lambda_0 * \lambda_2$$
$$g_7 = l_5T_0 / \lambda_0 * (cp_5(u_5 + bpr_5 / T_0) - cp_4(u_4 + bpr_4 / T_0)) + (l_4 - l_3 + m_{pcfl1} + m_{scfl1}) / \lambda_0 * \lambda_3$$
$$-((l_5 - l_4) / \lambda_0) * ((AT_0((u_4 + bpr_4 / T_0) + B) - cp_4T_0(u_4 + bpr_4 / T_0))$$
$$g_8 = U_4A_4T_0 / (F\lambda_0) * (u_3 - (u_4 + bpr_4 / T_0)) - (l_4 - l_3 + m_{pcfl1} + m_{scfl1}) / \lambda_0 * \lambda_3$$
$$g_9 = l_6T_0 / \lambda_0 * (cp_6(u_6 + bpr_6 / T_0) - cp_5(u_5 + bpr_5 / T_0)) + (l_5 - l_4 + m_{pcfl2} + m_{scfl2}) / \lambda_0 * \lambda_4$$
$$-((l_6 - l_5) / \lambda_0) * ((AT_0((u_5 + bpr_5 / T_0) + B) - cp_5T_0(u_5 + bpr_5 / T_0))$$
$$g_{10} = U_5A_5T_0 / (F\lambda_0) * (u_4 - (u_5 + bpr_5 / T_0)) - (l_5 - l_4 + m_{pcfl2} + m_{scfl2}) / \lambda_0 * \lambda_4$$
$$g_{11} = l_7T_0 / \lambda_0 * (cp_7(u_7 + bpr_7 / T_0) - cp_6(u_6 + bpr_6 / T_0)) + (l_6 - l_5 + m_{pcfl3} + m_{scfl3}) / \lambda_0 * \lambda_5$$
$$-((l_7 - l_6) / \lambda_0) * ((AT_0((u_6 + bpr_6 / T_0) + B) - cp_6T_0(u_6 + bpr_6 / T_0))$$
$$g_{12} = U_6A_6T_0 / (F\lambda_0) * (u_5 - (u_6 + bpr_6 / T_0)) - (l_6 - l_5 + m_{pcfl3} + m_{scfl3}) / \lambda_0 * \lambda_5$$
$$g_{13} = T_0 / \lambda_0 * (cp_f(u_6 + bpr_f / T_0) - cp_7(u_7 + bpr_7 / T_0)) + (l_7 - l_6 + m_{scfl4}) / \lambda_0 * \lambda_6$$
$$-((1 - l_7) / \lambda_0) * ((AT_0((u_7 + bpr_7 / T_0) + B) - cp_7T_0(u_7 + bpr_7 / T_0))$$
$$g_{14} = U_7A_7T_0 / (F\lambda_0) * (u_6 - (u_7 + bpr_7 / T_0)) - (l_7 - l_6 + m_{scfl4}) / \lambda_0 * \lambda_6$$

Equations for primary condensate flash tanks :

$$g_{15} = ((v_{01} + v_{02}) * \alpha T_0 * (1 - u_3)) / \lambda_0 - m_{pcfl1} / \lambda_0 * (C - D * u_3 * T_0)$$
$$g_{16} = ((v_{01} + v_{02} - m_{pcfl1}) * \alpha T_0 * (u_3 - u_4)) / \lambda_0 - m_{pcfl2} / \lambda_0 * (C - D * u_4 * T_0)$$
$$g_{17} = ((v_{01} + v_{02} - m_{pcfl1} - m_{pcfl2}) * \alpha T_0 * (u_4 - u_5)) / \lambda_0 - m_{pcfl3} / \lambda_0 * (C - D * u_5 * T_0)$$

Equations for secondary condensate flash tanks :

$$g_{18} = ((l_3 - l_1) * \alpha T_0 * (u_2 - u_3)) / \lambda_0 - m_{scfl1} / \lambda_0 * (C - D * u_3 * T_0)$$
$$g_{19} = ((l_4 - l_1 + m_{pcfl1}) * \alpha T_0 * (u_3 - u_4)) / \lambda_0 - m_{scfl2} / \lambda_0 * (C - D * u_4 * T_0)$$
$$g_{20} = ((l_5 - l_1 + m_{pcfl1} + m_{pcfl2}) * \alpha T_0 * (u_4 - u_5)) / \lambda_0 - m_{scfl3} / \lambda_0 * (C - D * u_5 * T_0)$$
$$g_{21} = ((l_6 - l_1 + m_{pcfl1} + m_{pcfl2} + m_{pcfl3}) * \alpha T_0 * (u_4 - u_5)) / \lambda_0 - m_{scfl4} / \lambda_0 * (C - D * u_6 * T_0)$$

Equation for Product flash tank:

$$g_{22} = l_1T_0 / \lambda_0 * (cp_1(u_1 + bpr_1 / T_0) - cp_p(u_3 + bpr_p / T_0))$$
$$-((l_1 - l_p) / \lambda_0) * ((AT_0((u_3 + bpr_p / T_0) + B) - cp_pT_0(u_3 + bpr_p / T_0))$$

4.7.2 Backward feed sequence with reheaters:

The equations for evaporator with reheaters for fig. 4.6.1 are given as

$$g_1 = l_2T_0 / \lambda_0 * (cp_2(u_2 + bpr_2 / T_0) - cp_1(u_1 + bpr_1 / T_0)) + v_{01}$$
$$-((l_2 - l_1) / \lambda_0) * ((AT_0((u_1 + bpr_1 / T_0) + B) - cp_1T_0(u_1 + bpr_1 / T_0))$$
$$g_2 = U_1A_1T_0 /(F\lambda_0) * (1 - (u_1 + bpr_1 / T_0)) - v_{01}$$
$$g_3 = l_3T_0 / \lambda_0 * (cp_3 * 0.5 * (u_2 + u_3 + bpr_3 / T_0) - cp_2(u_2 + bpr_2 / T_0)) + v_{02}$$
$$-((l_3 - l_2) / \lambda_0) * ((AT_0((u_2 + bpr_2 / T_0) + B) - cp_2T_0(u_2 + bpr_2 / T_0))$$
$$g_4 = U_2A_2T_0 /(F\lambda_0) * (1 - (u_2 + bpr_2 / T_0)) - v_{02}$$
$$g_5 = l_4T_0 / \lambda_0 * (cp_4 * 0.5 * (u_3 + u_4 + bpr_4 / T_0) - cp_3(u_3 + bpr_3 / T_0)) + (l_2 - l_1) / \lambda_0 * \lambda_1$$
$$+(l_3 - l_2 - m_{rh1}) / \lambda_0 * \lambda_2 - ((l_4 - l_3) / \lambda_0) * ((AT_0((u_3 + bpr_3 / T_0) + B) - cp_3T_0(u_3 + bpr_3 / T_0))$$
$$g_6 = U_3A_3T_0 /(F\lambda_0) * (u_2 - (u_3 + bpr_3 / T_0)) - (l_2 - l_1) / \lambda_0 * \lambda_1 - (l_3 - l_2 - m_{rh1}) / \lambda_0 * \lambda_2$$
$$g_7 = l_5T_0 / \lambda_0 * (cp_5 * 0.5 * (u_4 + u_5 + bpr_5 / T_0) - cp_4(u_4 + bpr_4 / T_0))$$
$$+(l_4 - l_3 + m_{pcft1} + m_{scft1} - m_{rh2} + (l_1 - l_p)) / \lambda_0 * \lambda_3$$
$$-((l_5 - l_4) / \lambda_0) * ((AT_0((u_4 + bpr_4 / T_0) + B) - cp_4T_0(u_4 + bpr_4 / T_0))$$
$$g_8 = U_4A_4T_0 /(F\lambda_0) * (u_3 - (u_4 + bpr_4 / T_0)) - (l_4 - l_3 + m_{pcft1} + m_{scft1} - m_{rh2} + (l_1 - l_p)) / \lambda_0 * \lambda_3$$
$$g_9 = l_6T_0 / \lambda_0 * (cp_6(u_6 + bpr_6 / T_0) - cp_5(u_5 + bpr_5 / T_0)) + (l_5 - l_4 + m_{pcft2} + m_{scft2} - m_{rh3}) / \lambda_0 * \lambda_4$$
$$-((l_6 - l_5) / \lambda_0) * ((AT_0((u_5 + bpr_5 / T_0) + B) - cp_5T_0(u_5 + bpr_5 / T_0))$$
$$g_{10} = U_5A_5T_0 /(F\lambda_0) * (u_4 - (u_5 + bpr_5 / T_0)) - (l_5 - l_4 + m_{pcft2} + m_{scft2} - m_{rh3}) / \lambda_0 * \lambda_4$$
$$g_{11} = l_7T_0 / \lambda_0 * (cp_7(u_7 + bpr_7 / T_0) - cp_6(u_6 + bpr_6 / T_0)) + (l_6 - l_5 + m_{pcft3} + m_{scft3} - m_{rh4}) / \lambda_0 * \lambda_5$$
$$-((l_7 - l_6) / \lambda_0) * ((AT_0((u_6 + bpr_6 / T_0) + B) - cp_6T_0(u_6 + bpr_6 / T_0))$$
$$g_{12} = U_6A_6T_0 /(F\lambda_0) * (u_5 - (u_6 + bpr_6 / T_0)) - (l_6 - l_5 + m_{pcft3} + m_{scft3} - m_{rh4}) / \lambda_0 * \lambda_5$$
$$g_{13} = T_0 / \lambda_0 * (cp_f u_f - cp_7(u_7 + bpr_7 / T_0)) + (l_7 - l_6 + m_{scft4}) / \lambda_0 * \lambda_6$$
$$-((1 - l_7) / \lambda_0) * ((AT_0((u_7 + bpr_7 / T_0) + B) - cp_7T_0(u_7 + bpr_7 / T_0))$$
$$g_{14} = U_7A_7T_0 /(F\lambda_0) * (u_6 - (u_7 + bpr_7 / T_0)) - (l_7 - l_6 + m_{scft4}) / \lambda_0 * \lambda_6$$

Equations for primary condensate flash tanks:

$$g_{15} = ((v_{01} + v_{02}) * \alpha T_0 * (1 - u_3)) / \lambda_0 - m_{pcft1} / \lambda_0 * (C - D * u_3 * T_0)$$
$$g_{16} = ((v_{01} + v_{02} - m_{pcft1}) * \alpha T_0 * (u_3 - u_4)) / \lambda_0 - m_{pcft2} / \lambda_0 * (C - D * u_4 * T_0)$$
$$g_{17} = ((v_{01} + v_{02} - m_{pcft1} - m_{pcft2}) * \alpha T_0 * (u_4 - u_5)) / \lambda_0 - m_{pcft3} / \lambda_0 * (C - D * u_5 * T_0)$$

Equations for secondary condensate flash tanks:

$$g_{18} = ((l_3 - l_1) * \alpha T_0 * (u_2 - u_3)) / \lambda_0 - m_{scfl1} / \lambda_0 * (C - D * u_3 * T_0)$$
$$g_{19} = ((l_4 - l_1 + m_{pcfl1}) * \alpha T_0 * (u_3 - u_4)) / \lambda_0 - m_{scfl2} / \lambda_0 * (C - D * u_4 * T_0)$$
$$g_{20} = ((l_5 - l_1 + m_{pcfl1} + m_{pcfl2}) * \alpha T_0 * (u_4 - u_5)) / \lambda_0 - m_{scfl3} / \lambda_0 * (C - D * u_5 * T_0)$$
$$g_{21} = ((l_6 - l_1 + m_{pcfl1} + m_{pcfl2} + m_{pcfl3}) * \alpha T_0 * (u_4 - u_5)) / \lambda_0 - m_{scfl4} / \lambda_0 * (C - D * u_6 * T_0)$$

Equation for Product flash tank:

$$g_{22} = l_1 T_0 / \lambda_0 * (cp_1 (u_1 + bpr_1 / T_0) - cp_p (u_3 + bpr_p / T_0))$$
$$- ((l_1 - l_p) / \lambda_0) * ((AT_0 ((u_3 + bpr_p / T_0) + B) - cp_p T_0 (u_3 + bpr_p / T_0))$$

Equations for reheaters:

$$g_{23} = (l_3 cp_3 T_0 * 0.5) / \lambda_0 * (u_2 - (u_3 + bpr_3 / T_0)) - m_{rh1} / \lambda_0 * \lambda_2$$
$$g_{24} = (l_4 cp_4 T_0 * 0.5) / \lambda_0 * (u_3 - (u_4 + bpr_4 / T_0)) - m_{rh2} / \lambda_0 * \lambda_3$$
$$g_{25} = (l_5 cp_5 T_0 * 0.5) / \lambda_0 * (u_4 - (u_5 + bpr_5 / T_0)) - m_{rh3} / \lambda_0 * \lambda_4$$
$$g_{26} = (l_6 cp_6 T_0 * 0.5) / \lambda_0 * (u_5 - (u_6 + bpr_6 / T_0)) - m_{rh4} / \lambda_0 * \lambda_5$$

4.7.3 Mixed feed sequence (6-7-5-4-3-2-1) with reheaters:

The equations for evaporator is given by

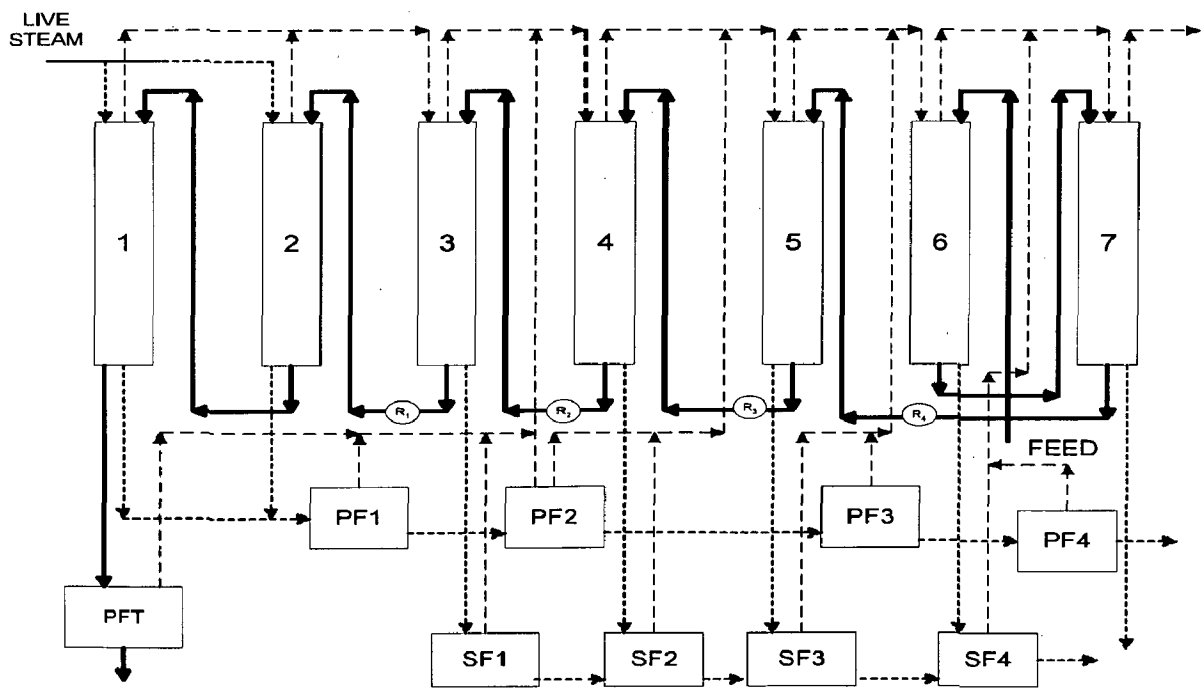

Fig 4.7: Schematic diagram of a SEFFFE system with product, condensate flashing as well as steam splitting and reheaters for mixed flow sequence (S2).

$$g_1 = l_2 T_0 / \lambda_0 * (cp_2(u_2 + bpr_2 / T_0) - cp_1(u_1 + bpr_1 / T_0)) + v_{01}$$
$$-((l_2 - l_1)/\lambda_0) * ((AT_0((u_1 + bpr_1 / T_0) + B) - cp_1 T_0(u_1 + bpr_1 / T_0))$$
$$g_2 = U_1 A_1 T_0 / (F\lambda_0) * (1 - (u_1 + bpr_1 / T_0)) - v_{01}$$
$$g_3 = l_3 T_0 / \lambda_0 * (cp_3 * 0.5 * (u_2 + u_3 + bpr_3 / T_0) - cp_2(u_2 + bpr_2 / T_0)) + v_{02}$$
$$-((l_3 - l_2)/\lambda_0) * ((AT_0((u_2 + bpr_2 / T_0) + B) - cp_2 T_0(u_2 + bpr_2 / T_0))$$
$$g_4 = U_2 A_2 T_0 / (F\lambda_0) * (1 - (u_2 + bpr_2 / T_0)) - v_{02}$$
$$g_5 = l_4 T_0 / \lambda_0 * (cp_4(u_4 + bpr_4 / T_0) - cp_3(u_3 + bpr_3 / T_0)) + (l_2 - l_1)/\lambda_0 * \lambda_1$$
$$+(l_3 - l_2 - m_{rh1})/\lambda_0 * \lambda_2 - ((l_4 - l_3)/\lambda_0) * ((AT_0((u_3 + bpr_3 / T_0) + B) - cp_3 T_0(u_3 + bpr_3 / T_0))$$
$$g_6 = U_3 A_3 T_0 / (F\lambda_0) * (u_2 - (u_3 + bpr_3 / T_0)) - (l_2 - l_1)/\lambda_0 * \lambda_1 - (l_3 - l_2 - m_{rh1})/\lambda_0 * \lambda_2$$
$$g_7 = l_5 T_0 / \lambda_0 * (cp_5(u_5 + bpr_5 / T_0) - cp_4(u_4 + bpr_4 / T_0))$$
$$+(l_4 - l_3 + m_{pcft1} + m_{scft1} - m_{rh2} + (l_1 - l_p))/\lambda_0 * \lambda_3$$
$$-((l_5 - l_4)/\lambda_0) * ((AT_0((u_4 + bpr_4 / T_0) + B) - cp_4 T_0(u_4 + bpr_4 / T_0))$$
$$g_8 = U_4 A_4 T_0 / (F\lambda_0) * (u_3 - (u_4 + bpr_4 / T_0)) - (l_4 - l_3 + m_{pcft1} + m_{scft1} - m_{rh2} + (l_1 - l_p))/\lambda_0 * \lambda_3$$
$$g_9 = l_7 T_0 / \lambda_0 * (cp_7(u_7 + bpr_7 / T_0) - cp_5(u_5 + bpr_5 / T_0)) + (l_5 - l_4 + m_{pcft2} + m_{scft2} - m_{rh3})/\lambda_0 * \lambda_4$$
$$-((l_7 - l_5)/\lambda_0) * ((AT_0((u_5 + bpr_5 / T_0) + B) - cp_5 T_0(u_5 + bpr_5 / T_0))$$
$$g_{10} = U_5 A_5 T_0 / (F\lambda_0) * (u_4 - (u_5 + bpr_5 / T_0)) - (l_5 - l_4 + m_{pcft2} + m_{scft2} - m_{rh3})/\lambda_0 * \lambda_4$$
$$g_{11} = T_0 / \lambda_0 * (cp_f u_f - cp_6(u_6 + bpr_6 / T_0)) + (l_7 - l_5 + m_{pcft3} + m_{scft3} - m_{rh4})/\lambda_0 * \lambda_5$$
$$-((1 - l_6)/\lambda_0) * ((AT_0((u_6 + bpr_6 / T_0) + B) - cp_6 T_0(u_6 + bpr_6 / T_0))$$
$$g_{12} = U_6 A_6 T_0 / (F\lambda_0) * (u_5 - (u_6 + bpr_6 / T_0)) - (l_7 - l_5 + m_{pcft3} + m_{scft3} - m_{rh4})/\lambda_0 * \lambda_5$$
$$g_{13} = l_6 T_0 / \lambda_0 * (cp_6(u_6 + bpr_6 / T_0) - cp_7(u_7 + bpr_7 / T_0)) + (1 - l_6 + m_{pcft4} + m_{scft4})/\lambda_0 * \lambda_6$$
$$-((l_6 - l_7)/\lambda_0) * ((AT_0((u_7 + bpr_7 / T_0) + B) - cp_7 T_0(u_7 + bpr_7 / T_0))$$
$$g_{14} = U_7 A_7 T_0 / (F\lambda_0) * (u_6 - (u_7 + bpr_7 / T_0)) - (1 - l_6 + m_{pcft4} + m_{scft4})/\lambda_0 * \lambda_6$$

Equations for primary condensate flash tanks:

$$g_{15} = ((v_{01} + v_{02}) * \alpha T_0 * (1 - u_3))/\lambda_0 - m_{pcft1}/\lambda_0 * (C - D * u_3 * T_0)$$
$$g_{16} = ((v_{01} + v_{02} - m_{pcft1}) * \alpha T_0 * (u_3 - u_4))/\lambda_0 - m_{pcft2}/\lambda_0 * (C - D * u_4 * T_0)$$
$$g_{17} = ((v_{01} + v_{02} - m_{pcft1} - m_{pcft2}) * \alpha T_0 * (u_4 - u_5))/\lambda_0 - m_{pcft3}/\lambda_0 * (C - D * u_5 * T_0)$$
$$g_{18} = ((v_{01} + v_{02} - m_{pcft1} - m_{pcft2} - m_{pcft3}) * \alpha T_0 * (u_5 - u_6))/\lambda_0 - m_{pcft4}/\lambda_0 * (C - D * u_6 * T_0)$$

Equations for secondary condensate flash tanks:

$$g_{19} = ((l_3 - l_1) * \alpha T_0 * (u_2 - u_3))/\lambda_0 - m_{scft1}/\lambda_0 * (C - D * u_3 * T_0)$$
$$g_{20} = ((l_4 - l_1 + m_{pcft1}) * \alpha T_0 * (u_3 - u_4))/\lambda_0 - m_{scft2}/\lambda_0 * (C - D * u_4 * T_0)$$
$$g_{21} = ((l_5 - l_1 + m_{pcft1} + m_{pcft2}) * \alpha T_0 * (u_4 - u_5))/\lambda_0 - m_{scft3}/\lambda_0 * (C - D * u_5 * T_0)$$
$$g_{22} = ((l_7 - l_1 + m_{pcft1} + m_{pcft2} + m_{pcft3}) * \alpha T_0 * (u_4 - u_5))/\lambda_0 - m_{scft4}/\lambda_0 * (C - D * u_6 * T_0)$$

Equation for Product flash tank:

$$g_{23} = l_1 T_0 / \lambda_0 * (cp_1(u_1 + bpr_1 / T_0) - cp_p(u_3 + bpr_p / T_0))$$
$$-((l_1 - l_p)/\lambda_0) * ((AT_0((u_3 + bpr_p / T_0) + B) - cp_p T_0(u_3 + bpr_p / T_0))$$

Equations for reheaters:

$$g_{24} = (l_3 cp_3 T_0 * 0.5)/\lambda_0 * (u_2 - (u_3 + bpr_3 / T_0)) - m_{rh1} / \lambda_0 * \lambda_2$$
$$g_{25} = (l_4 cp_4 T_0 * 0.5)/\lambda_0 * (u_3 - (u_4 + bpr_4 / T_0)) - m_{rh2} / \lambda_0 * \lambda_3$$
$$g_{26} = (l_5 cp_5 T_0 * 0.5)/\lambda_0 * (u_4 - (u_5 + bpr_5 / T_0)) - m_{rh3} / \lambda_0 * \lambda_4$$
$$g_{27} = (l_7 cp_7 T_0 * 0.5)/\lambda_0 * (u_5 - (u_7 + bpr_7 / T_0)) - m_{rh4} / \lambda_0 * \lambda_5$$

4.7.4 Mixed feed sequence (5-6-7-4-3-2-1) with reheaters:

The equations for evaporator is given by

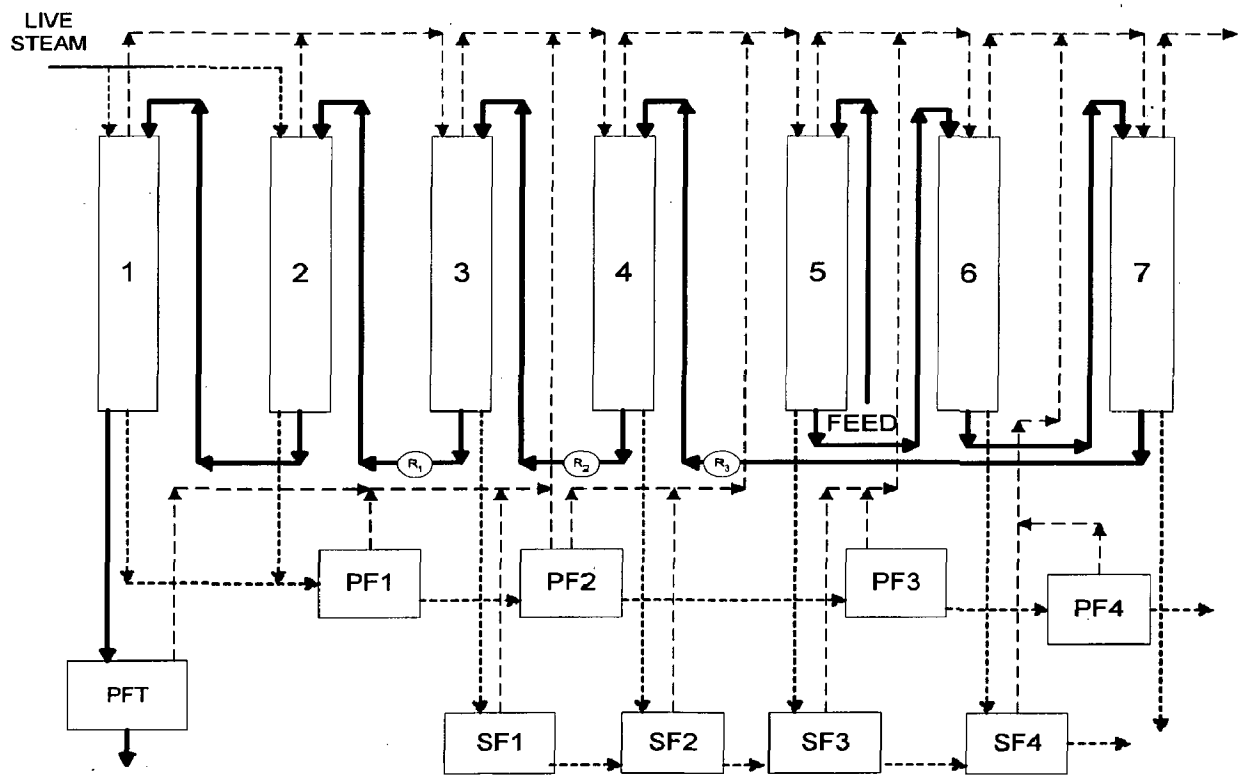

Fig 4.8: Schematic diagram of a SEFFFE system with product, condensate flashing as well as steam splitting and reheaters for mixed flow sequence (S3).

$$g_1 = l_2 T_0 / \lambda_0 * (cp_2(u_2 + bpr_2 / T_0) - cp_1(u_1 + bpr_1 / T_0)) + v_{01}$$
$$-((l_2 - l_1)/\lambda_0) * ((AT_0((u_1 + bpr_1 / T_0) + B) - cp_1 T_0(u_1 + bpr_1 / T_0))$$
$$g_2 = U_1 A_1 T_0 / (F\lambda_0) * (1 - (u_1 + bpr_1 / T_0)) - v_{01}$$
$$g_3 = l_3 T_0 / \lambda_0 * (cp_3 * 0.5 * (u_2 + u_3 + bpr_3 / T_0) - cp_2(u_2 + bpr_2 / T_0)) + v_{02}$$
$$-((l_3 - l_2)/\lambda_0) * ((AT_0((u_2 + bpr_2 / T_0) + B) - cp_2 T_0(u_2 + bpr_2 / T_0))$$
$$g_4 = U_2 A_2 T_0 / (F\lambda_0) * (1 - (u_2 + bpr_2 / T_0)) - v_{02}$$
$$g_5 = l_4 T_0 / \lambda_0 * (cp_4(u_4 + bpr_4 / T_0) - cp_3(u_3 + bpr_3 / T_0)) + (l_2 - l_1)/\lambda_0 * \lambda_1$$
$$+(l_3 - l_2 - m_{rh1})/\lambda_0 * \lambda_2 - ((l_4 - l_3)/\lambda_0) * ((AT_0((u_3 + bpr_3 / T_0) + B) - cp_3 T_0(u_3 + bpr_3 / T_0))$$
$$g_6 = U_3 A_3 T_0 / (F\lambda_0) * (u_2 - (u_3 + bpr_3 / T_0)) - (l_2 - l_1)/\lambda_0 * \lambda_1 - (l_3 - l_2 - m_{rh1})/\lambda_0 * \lambda_2$$
$$g_7 = l_7 T_0 / \lambda_0 * (cp_7(u_7 + bpr_7 / T_0) - cp_4(u_4 + bpr_4 / T_0))$$
$$+(l_4 - l_3 + m_{pcft1} + m_{scft1} - m_{rh2} + (l_1 - l_p))/\lambda_0 * \lambda_3$$
$$-((l_7 - l_4)/\lambda_0) * ((AT_0((u_4 + bpr_4 / T_0) + B) - cp_4 T_0(u_4 + bpr_4 / T_0))$$
$$g_8 = U_4 A_4 T_0 / (F\lambda_0) * (u_3 - (u_4 + bpr_4 / T_0)) - (l_4 - l_3 + m_{pcft1} + m_{scft1} - m_{rh2} + (l_1 - l_p))/\lambda_0 * \lambda_3$$
$$g_9 = T_0 / \lambda_0 * (cp_f u_f - cp_5(u_5 + bpr_5 / T_0)) + (l_7 - l_4 + m_{pcft2} + m_{scft2} - m_{rh3})/\lambda_0 * \lambda_4$$
$$-((1 - l_5)/\lambda_0) * ((AT_0((u_5 + bpr_5 / T_0) + B) - cp_5 T_0(u_5 + bpr_5 / T_0))$$
$$g_{10} = U_5 A_5 T_0 / (F\lambda_0) * (u_4 - (u_5 + bpr_5 / T_0)) - (l_7 - l_4 + m_{pcft2} + m_{scft2} - m_{rh3})/\lambda_0 * \lambda_4$$
$$g_{11} = l_5 T_0 / \lambda_0 * (cp_5(u_5 + bpr_5 / T_0) - cp_6(u_6 + bpr_6 / T_0)) + (1 - l_5 + m_{pcft3} + m_{scft3})/\lambda_0 * \lambda_5$$
$$-((l_5 - l_6)/\lambda_0) * ((AT_0((u_6 + bpr_6 / T_0) + B) - cp_6 T_0(u_6 + bpr_6 / T_0))$$
$$g_{12} = U_6 A_6 T_0 / (F\lambda_0) * (u_5 - (u_6 + bpr_6 / T_0)) - (1 - l_5 + m_{pcft3} + m_{scft3})/\lambda_0 * \lambda_5$$
$$g_{13} = l_6 T_0 / \lambda_0 * (cp_6(u_6 + bpr_6 / T_0) - cp_7(u_7 + bpr_7 / T_0)) + (l_5 - l_6 + m_{pcft4} + m_{scft4})/\lambda_0 * \lambda_6$$
$$-((l_6 - l_7)/\lambda_0) * ((AT_0((u_7 + bpr_7 / T_0) + B) - cp_7 T_0(u_7 + bpr_7 / T_0))$$
$$g_{14} = U_7 A_7 T_0 / (F\lambda_0) * (u_6 - (u_7 + bpr_7 / T_0)) - (l_5 - l_6 + m_{pcft4} + m_{scft4})/\lambda_0 * \lambda_6$$

Equations for primary condensate flash tanks:

$$g_{15} = ((v_{01} + v_{02}) * \alpha T_0 * (1 - u_3))/\lambda_0 - m_{pcft1}/\lambda_0 * (C - D * u_3 * T_0)$$
$$g_{16} = ((v_{01} + v_{02} - m_{pcft1}) * \alpha T_0 * (u_3 - u_4))/\lambda_0 - m_{pcft2}/\lambda_0 * (C - D * u_4 * T_0)$$
$$g_{17} = ((v_{01} + v_{02} - m_{pcft1} - m_{pcft2}) * \alpha T_0 * (u_4 - u_5))/\lambda_0 - m_{pcft3}/\lambda_0 * (C - D * u_5 * T_0)$$
$$g_{18} = ((v_{01} + v_{02} - m_{pcft1} - m_{pcft2} - m_{pcft3}) * \alpha T_0 * (u_5 - u_6))/\lambda_0 - m_{pcft4}/\lambda_0 * (C - D * u_6 * T_0)$$

Equations for secondary condensate flash tanks:

$$g_{19} = ((l_3 - l_1) * \alpha T_0 * (u_2 - u_3))/\lambda_0 - m_{scft1}/\lambda_0 * (C - D * u_3 * T_0)$$
$$g_{20} = ((l_4 - l_1 + m_{pcft1}) * \alpha T_0 * (u_3 - u_4))/\lambda_0 - m_{scft2}/\lambda_0 * (C - D * u_4 * T_0)$$
$$g_{21} = ((l_7 - l_1 + m_{pcft1} + m_{pcft2}) * \alpha T_0 * (u_4 - u_5))/\lambda_0 - m_{scft3}/\lambda_0 * (C - D * u_5 * T_0)$$
$$g_{22} = ((l_7 - l_1 - l_5 + 1 + m_{pcft1} + m_{pcft2} + m_{pcft3}) * \alpha T_0 * (u_5 - u_6))/\lambda_0 - m_{scft4}/\lambda_0 * (C - D * u_6 * T_0)$$

Equation for Product flash tank:

$$g_{23} = l_1 T_0 / \lambda_0 * (cp_1(u_1 + bpr_1 / T_0) - cp_p(u_3 + bpr_p / T_0))$$
$$-((l_1 - l_p) / \lambda_0) * ((AT_0((u_3 + bpr_p / T_0) + B) - cp_p T_0(u_3 + bpr_p / T_0))$$

Equations for reheaters:

$$g_{24} = (l_3 cp_3 T_0 * 0.5) / \lambda_0 * (u_2 - (u_3 + bpr_3 / T_0)) - m_{rh1} / \lambda_0 * \lambda_2$$
$$g_{25} = (l_4 cp_4 T_0 * 0.5) / \lambda_0 * (u_3 - (u_4 + bpr_4 / T_0)) - m_{rh2} / \lambda_0 * \lambda_3$$
$$g_{26} = (l_7 cp_7 T_0 * 0.5) / \lambda_0 * (u_4 - (u_7 + bpr_7 / T_0)) - m_{rh3} / \lambda_0 * \lambda_4$$

4.7.5 Mixed feed sequence (4-5-6-7-3-2-1) with reheaters:

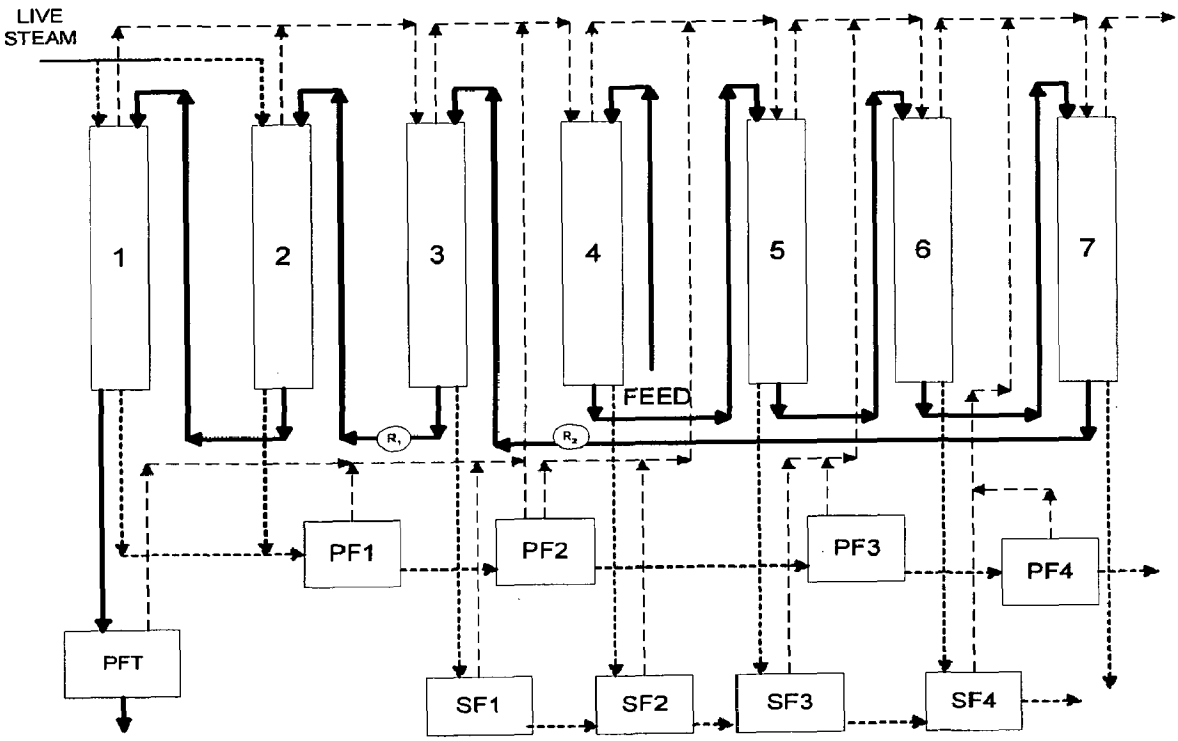

Fig 4.9: Schematic diagram of a SEFFFE system with product, condensate flashing as well as steam splitting and reheaters for mixed flow sequence (S4).

$$g_1 = l_2 T_0 / \lambda_0 * (cp_2(u_2 + bpr_2 / T_0) - cp_1(u_1 + bpr_1 / T_0)) + v_{01}$$
$$-((l_2 - l_1) / \lambda_0) * ((AT_0((u_1 + bpr_1 / T_0) + B) - cp_1 T_0(u_1 + bpr_1 / T_0))$$
$$g_2 = U_1 A_1 T_0 / (F\lambda_0) * (1 - (u_1 + bpr_1 / T_0)) - v_{01}$$
$$g_3 = l_3 T_0 / \lambda_0 * (cp_3 * 0.5 * (u_2 + u_3 + bpr_3 / T_0) - cp_2(u_2 + bpr_2 / T_0)) + v_{02}$$
$$-((l_3 - l_2) / \lambda_0) * ((AT_0((u_2 + bpr_2 / T_0) + B) - cp_2 T_0(u_2 + bpr_2 / T_0))$$
$$g_4 = U_2 A_2 T_0 / (F\lambda_0) * (1 - (u_2 + bpr_2 / T_0)) - v_{02}$$
$$g_5 = l_7 T_0 / \lambda_0 * (cp_7(u_7 + bpr_7 / T_0) - cp_3(u_3 + bpr_3 / T_0)) + (l_2 - l_1) / \lambda_0 * \lambda_1$$
$$+(l_3 - l_2 - m_{rh1}) / \lambda_0 * \lambda_2 - ((l_4 - l_3) / \lambda_0) * ((AT_0((u_3 + bpr_3 / T_0) + B) - cp_3 T_0(u_3 + bpr_3 / T_0))$$
$$g_6 = U_3 A_3 T_0 / (F\lambda_0) * (u_2 - (u_3 + bpr_3 / T_0)) - (l_2 - l_1) / \lambda_0 * \lambda_1 - (l_3 - l_2 - m_{rh1}) / \lambda_0 * \lambda_2$$
$$g_7 = T_0 / \lambda_0 * (cp_f u_f - cp_4(u_4 + bpr_4 / T_0)) + (l_7 - l_3 + m_{pcft1} + m_{scft1} - m_{rh2} + (l_1 - l_p)) / \lambda_0 * \lambda_3$$
$$-((1 - l_4) / \lambda_0) * ((AT_0((u_4 + bpr_4 / T_0) + B) - cp_4 T_0(u_4 + bpr_4 / T_0))$$
$$g_8 = U_4 A_4 T_0 / (F\lambda_0) * (u_3 - (u_4 + bpr_4 / T_0)) - (l_7 - l_3 + m_{pcft1} + m_{scft1} - m_{rh2} + (l_1 - l_p)) / \lambda_0 * \lambda_3$$
$$g_9 = l_4 T_0 / \lambda_0 * (cp_4 T_0(u_4 + bpr_4 / T_0) - cp_5(u_5 + bpr_5 / T_0)) + (1 - l_4 + m_{pcft2} + m_{scft2}) / \lambda_0 * \lambda_4$$
$$-((l_4 - l_5) / \lambda_0) * ((AT_0((u_5 + bpr_5 / T_0) + B) - cp_5 T_0(u_5 + bpr_5 / T_0))$$
$$g_{10} = U_5 A_5 T_0 / (F\lambda_0) * (u_4 - (u_5 + bpr_5 / T_0)) - (1 - l_4 + m_{pcft2} + m_{scft2}) / \lambda_0 * \lambda_4$$
$$g_{11} = l_5 T_0 / \lambda_0 * (cp_5(u_5 + bpr_5 / T_0) - cp_6(u_6 + bpr_6 / T_0)) + (l_4 - l_5 + m_{pcft3} + m_{scft3}) / \lambda_0 * \lambda_5$$
$$-((l_5 - l_6) / \lambda_0) * ((AT_0((u_6 + bpr_6 / T_0) + B) - cp_6 T_0(u_6 + bpr_6 / T_0))$$
$$g_{12} = U_6 A_6 T_0 / (F\lambda_0) * (u_5 - (u_6 + bpr_6 / T_0)) - (l_4 - l_5 + m_{pcft3} + m_{scft3}) / \lambda_0 * \lambda_5$$
$$g_{13} = l_6 T_0 / \lambda_0 * (cp_6(u_6 + bpr_6 / T_0) - cp_7(u_7 + bpr_7 / T_0)) + (l_5 - l_6 + m_{pcft4} + m_{scft4}) / \lambda_0 * \lambda_6$$
$$-((l_6 - l_7) / \lambda_0) * ((AT_0((u_7 + bpr_7 / T_0) + B) - cp_7 T_0(u_7 + bpr_7 / T_0))$$
$$g_{14} = U_7 A_7 T_0 / (F\lambda_0) * (u_6 - (u_7 + bpr_7 / T_0)) - (l_5 - l_6 + m_{pcft4} + m_{scft4}) / \lambda_0 * \lambda_6$$

Equations for primary condensate flash tanks:

$$g_{15} = ((v_{01} + v_{02}) * \alpha T_0 * (1 - u_3)) / \lambda_0 - m_{pcft1} / \lambda_0 * (C - D * u_3 * T_0)$$
$$g_{16} = ((v_{01} + v_{02} - m_{pcft1}) * \alpha T_0 * (u_3 - u_4)) / \lambda_0 - m_{pcft2} / \lambda_0 * (C - D * u_4 * T_0)$$
$$g_{17} = ((v_{01} + v_{02} - m_{pcft1} - m_{pcft2}) * \alpha T_0 * (u_4 - u_5)) / \lambda_0 - m_{pcft3} / \lambda_0 * (C - D * u_5 * T_0)$$
$$g_{18} = ((v_{01} + v_{02} - m_{pcft1} - m_{pcft2} - m_{pcft3}) * \alpha T_0 * (u_5 - u_6)) / \lambda_0 - m_{pcft4} / \lambda_0 * (C - D * u_6 * T_0)$$

Equations for secondary condensate flash tanks:

$$g_{19} = ((l_3 - l_1) * \alpha T_0 * (u_2 - u_3)) / \lambda_0 - m_{scft1} / \lambda_0 * (C - D * u_3 * T_0)$$
$$g_{20} = ((l_4 - l_1 + m_{pcft1}) * \alpha T_0 * (u_3 - u_4)) / \lambda_0 - m_{scft2} / \lambda_0 * (C - D * u_4 * T_0)$$
$$g_{21} = ((l_7 - l_1 + m_{pcft1} + m_{pcft2}) * \alpha T_0 * (u_4 - u_5)) / \lambda_0 - m_{scft3} / \lambda_0 * (C - D * u_5 * T_0)$$
$$g_{22} = ((l_7 - l_1 - l_5 + 1 + m_{pcft1} + m_{pcft2} + m_{pcft3}) * \alpha T_0 * (u_5 - u_6)) / \lambda_0 - m_{scft4} / \lambda_0 * (C - D * u_6 * T_0)$$

Equations for product flash tank:

$$g_{23} = l_1 T_0 / \lambda_0 * (cp_1(u_1 + bpr_1 / T_0) - cp_p(u_3 + bpr_p / T_0))$$
$$-((l_1 - l_p) / \lambda_0) * ((AT_0((u_3 + bpr_p / T_0) + B) - cp_p T_0(u_3 + bpr_p / T_0))$$

Equations for reheaters:

$$g_{24} = (l_3 cp_3 T_0 * 0.5) / \lambda_0 * (u_2 - (u_3 + bpr_3 / T_0)) - m_{rh1} / \lambda_0 * \lambda_2$$
$$g_{25} = (l_7 cp_7 T_0 * 0.5) / \lambda_0 * (u_3 - (u_7 + bpr_7 / T_0)) - m_{rh2} / \lambda_0 * \lambda_3$$

4.7.6 Mixed feed sequence (3-4-5-6-7-2-1) with reheaters:

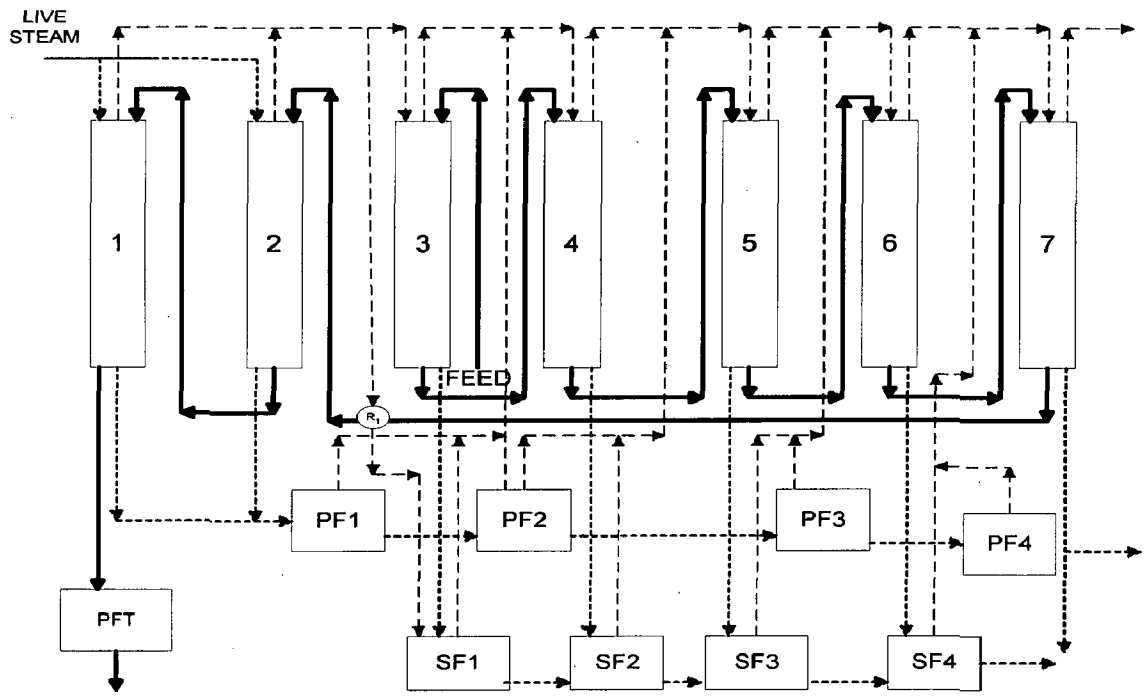

Fig 4.10: Schematic diagram of a SEFFFE system with product, condensate flashing as well as steam splitting and reheaters for mixed flow sequence (S5).

$$g_1 = l_2T_0 / \lambda_0 * (cp_2(u_2 + bpr_2 / T_0) - cp_1(u_1 + bpr_1 / T_0)) + v_{01}$$
$$-((l_2 - l_1)/\lambda_0) * ((AT_0((u_1 + bpr_1 / T_0) + B) - cp_1T_0(u_1 + bpr_1 / T_0))$$
$$g_2 = U_1A_1T_0 /(F\lambda_0) * (1 - (u_1 + bpr_1 / T_0)) - v_{01}$$
$$g_3 = l_7T_0 / \lambda_0 * (cp_7 * 0.5 * (u_2 + u_7 + bpr_7 / T_0) - cp_2(u_2 + bpr_2 / T_0)) + v_{02}$$
$$-((l_7 - l_2)/\lambda_0) * ((AT_0((u_2 + bpr_2 / T_0) + B) - cp_2T_0(u_2 + bpr_2 / T_0))$$
$$g_4 = U_2A_2T_0 /(F\lambda_0) * (1 - (u_2 + bpr_2 / T_0)) - v_{02}$$
$$g_5 = T_0 / \lambda_0 * (cp_f u_f - cp_3(u_3 + bpr_3 / T_0)) + (l_2 - l_1) / \lambda_0 * \lambda_1$$
$$+ (l_7 - l_2 - m_{rh1}) / \lambda_0 * \lambda_2 - ((1 - l_3) / \lambda_0) * ((AT_0((u_3 + bpr_3 / T_0) + B) - cp_3T_0(u_3 + bpr_3 / T_0))$$
$$g_6 = U_3A_3T_0 /(F\lambda_0) * (u_2 - (u_3 + bpr_3 / T_0)) - (l_2 - l_1) / \lambda_0 * \lambda_1 - (l_7 - l_2 - m_{rh1}) / \lambda_0 * \lambda_2$$
$$g_7 = l_3T_0 / \lambda_0 * (cp_3(u_3 + bpr_3 / T_0) - cp_4(u_4 + bpr_4 / T_0)) + (1 - l_3 + m_{pcft1} + m_{scft1}) / \lambda_0 * \lambda_3$$
$$-((l_3 - l_4)/\lambda_0) * ((AT_0((u_4 + bpr_4 / T_0) + B) - cp_4T_0(u_4 + bpr_4 / T_0))$$
$$g_8 = U_4A_4T_0 /(F\lambda_0) * (u_3 - (u_4 + bpr_4 / T_0)) - (1 - l_3 + m_{pcft1} + m_{scft1}) / \lambda_0 * \lambda_3$$
$$g_9 = l_4T_0 / \lambda_0 * (cp_4(u_4 + bpr_4 / T_0) - cp_5(u_5 + bpr_5 / T_0))$$
$$+ (l_3 - l_4 + m_{pcft2} + m_{scft2} + (l_1 - l_p)) / \lambda_0 * \lambda_4$$
$$-((l_4 - l_5)/\lambda_0) * ((AT_0((u_5 + bpr_5 / T_0) + B) - cp_5T_0(u_5 + bpr_5 / T_0))$$
$$g_{10} = U_5A_5T_0 /(F\lambda_0) * (u_4 - (u_5 + bpr_5 / T_0)) - (l_3 - l_4 + m_{pcft2} + m_{scft2} + (l_1 - l_p)) / \lambda_0 * \lambda_4$$
$$g_{11} = l_5T_0 / \lambda_0 * (cp_5(u_5 + bpr_5 / T_0) - cp_6(u_6 + bpr_6 / T_0)) + (l_4 - l_5 + m_{pcft3} + m_{scft3}) / \lambda_0 * \lambda_5$$
$$-((l_5 - l_6)/\lambda_0) * ((AT_0((u_6 + bpr_6 / T_0) + B) - cp_6T_0(u_6 + bpr_6 / T_0))$$
$$g_{12} = U_6A_6T_0 /(F\lambda_0) * (u_5 - (u_6 + bpr_6 / T_0)) - (l_4 - l_5 + m_{pcft2} + m_{scft2}) / \lambda_0 * \lambda_5$$
$$g_{13} = l_6T_0 / \lambda_0 * (cp_6(u_6 + bpr_6 / T_0) - cp_7(u_7 + bpr_7 / T_0)) + (l_5 - l_6 + m_{pcft4} + m_{scft4}) / \lambda_0 * \lambda_6$$
$$-((l_6 - l_7)/\lambda_0) * ((AT_0((u_7 + bpr_7 / T_0) + B) - cp_7T_0(u_7 + bpr_7 / T_0))$$
$$g_{14} = U_7A_7T_0 /(F\lambda_0) * (u_6 - (u_7 + bpr_7 / T_0)) - (l_5 - l_6 + m_{pcft4} + m_{scft4}) / \lambda_0 * \lambda_6$$

Equations for primary condensate flash tanks:

$$g_{15} = ((v_{01} + v_{02}) * \alpha T_0 * (1 - u_3)) / \lambda_0 - m_{pcft1} / \lambda_0 * (C - D * u_3 * T_0)$$
$$g_{16} = ((v_{01} + v_{02} - m_{pcft1}) * \alpha T_0 * (u_3 - u_4)) / \lambda_0 - m_{pcft2} / \lambda_0 * (C - D * u_4 * T_0)$$
$$g_{17} = ((v_{01} + v_{02} - m_{pcft1} - m_{pcft2}) * \alpha T_0 * (u_4 - u_5)) / \lambda_0 - m_{pcft3} / \lambda_0 * (C - D * u_5 * T_0)$$
$$g_{18} = ((v_{01} + v_{02} - m_{pcft1} - m_{pcft2} - m_{pcft3}) * \alpha T_0 * (u_5 - u_6)) / \lambda_0 - m_{pcft4} / \lambda_0 * (C - D * u_6 * T_0)$$

Equations for secondary condensate flash tanks:

$$g_{19} = ((l_7 - l_1) * \alpha T_0 * (u_2 - u_3)) / \lambda_0 - m_{scft1} / \lambda_0 * (C - D * u_3 * T_0)$$
$$g_{20} = ((l_7 - l_1 + 1 - l_3 + m_{pcft1}) * \alpha T_0 * (u_3 - u_4)) / \lambda_0 - m_{scft2} / \lambda_0 * (C - D * u_4 * T_0)$$
$$g_{21} = ((l_7 - l_1 + 1 - l_4 + m_{pcft1} + m_{pcft2}) * \alpha T_0 * (u_4 - u_5)) / \lambda_0 - m_{scft3} / \lambda_0 * (C - D * u_5 * T_0)$$
$$g_{22} = ((l_7 - l_1 + 1 - l_5 + m_{pcft1} + m_{pcft2} + m_{pcft3}) * \alpha T_0 * (u_5 - u_6)) / \lambda_0 - m_{scft4} / \lambda_0 * (C - D * u_6 * T_0)$$

Equation for reheaters:

$$g_{23} = (l_7 cp_7 T_0 * 0.5) / \lambda_0 * (u_2 - (u_7 + bpr_7 / T_0)) - m_{rh1} / \lambda_0 * \lambda_2$$

Equations for product flash tank:

$$g_{24} = l_1 T_0 / \lambda_0 * (cp_1 (u_1 + bpr_1 / T_0) - cp_p (u_3 + bpr_p / T_0))$$
$$-((l_1 - l_p) / \lambda_0) * ((AT_0((u_3 + bpr_p / T_0) + B) - cp_p T_0 (u_3 + bpr_p / T_0))$$

4.8 Solution procedure and technique:

For the solution of the simultaneous non linear equations developed for the simulation of MEE systems many authors such as Holland (1975), Radovic et al (1979), Ray et al (1992, 2000, 2004), Agarwal et al (2004) used numerical methods(Newton's method) for solving these set of equations. These methods usually depend on the initial guess and in MEE systems the initial guess can be guessed with fair accuracy because of known boundary of input parameters. In Newton's method to solve non linear equations an iterative procedure is used. Jacobian matrix of first order derivatives is used to get improvements in the values of unknown variables. The resulting system is a set of linear algebraic equations. These authors used Gauss elimination method with LU decomposition to solve set of linear equations. In the present work globally convergent method has been used as it is more advantageous than Newton's method.

Globally convergent method:

Newton's method for solving non linear equations has an unfortunate tendency to wander off if the initial guess is not sufficiently close to the root, whereas global method converges to a solution from almost any starting point. Hence for solving these equations this method has been employed.

For the solution of set of non-linear equations developed with unequal areas (A_j, where j=1 to 7) of all the effects.

Specified variables: F, X_F, T_F, T_0, P_0, P_7 (or T_7), A_1, A_2, A_3, A_4, A_5, A_6, A_7, U_1, U_2, U_3, U_4, U_5, U_6, U_7.

Unknown variables: V_{01}, V_{02}, L_1, L_2, L_3, L_4, L_5, L_6, L_7, L_P, T_1=T_2 (assumption), T_3, T_4, T_5, T_6, M_{P1}, M_{P2}, M_{P3}, M_{S1}, M_{S2}, M_{S3}, M_{S4}.

Where $M_j = m_j F$, Vapor flow rates of condensate flash tanks (primary and secondary).

These independent non-linear equations can be solved simultaneously for 22 unknown variables (scaled variables) for case without reheaters and backward feed flow sequence.

$$0 = g_j + \frac{\partial g_j}{\partial v_{01}}\Delta v_{01} + \frac{\partial g_j}{\partial v_{02}}\Delta v_{02} + \frac{\partial g_j}{\partial l_1}\Delta l_1 + \frac{\partial g_j}{\partial l_2}\Delta l_2 + \ldots + \frac{\partial g_j}{\partial l_7}\Delta l_7$$
$$+ \frac{\partial g_j}{\partial l_p}\Delta l_p + \frac{\partial g_j}{\partial u_1}\Delta u_1 + \ldots + \frac{\partial g_j}{\partial u_6}\Delta u_6 + \frac{\partial g_j}{\partial m_{p1}}\Delta m_{p1} + \ldots + \frac{\partial g_j}{\partial m_{p3}}\Delta m_{p3}$$
$$+ \frac{\partial g_j}{\partial m_{s1}}\Delta m_{s1} + \ldots + \frac{\partial g_j}{\partial m_{s4}}\Delta m_{s4}$$

Where j varies from 1 to 22.

The matrix representation is given as

$$J_k \Delta X_k = -f_k$$

Where J_k is given as

$$\begin{bmatrix}
\frac{\partial g_1}{\partial v_{01}} & \frac{\partial g_1}{\partial v_{02}} & \frac{\partial g_1}{\partial l_1} \cdots\cdots & \frac{\partial g_1}{\partial l_7} & \frac{\partial g_1}{\partial l_p} & \frac{\partial g_1}{\partial u_1} \cdots & \frac{\partial g_1}{\partial u_6} & \frac{\partial g_1}{\partial m_{p1}} \cdots & \frac{\partial g_1}{\partial m_{p3}} & \frac{\partial g_1}{\partial m_{s1}} \cdots & \frac{\partial g_1}{\partial m_{s4}} \\
\frac{\partial g_2}{\partial v_{01}} & \frac{\partial g_2}{\partial v_{02}} & \frac{\partial g_2}{\partial l_1} \cdots\cdots & \frac{\partial g_2}{\partial l_7} & \frac{\partial g_2}{\partial l_p} & \frac{\partial g_2}{\partial u_1} \cdots & \frac{\partial g_2}{\partial u_6} & \frac{\partial g_2}{\partial m_{p1}} \cdots & \frac{\partial g_2}{\partial m_{p3}} & \frac{\partial g_2}{\partial m_{s1}} \cdots & \frac{\partial g_2}{\partial m_{s4}} \\
\cdot & \cdot & \cdot \cdots & \cdot & \cdot & \cdot \cdots & \cdot & \cdot \cdots & \cdot & \cdot \cdots & \cdots \\
\cdot & \cdot & \cdot \cdots & \cdot & \cdot & \cdot \cdots & \cdot & \cdot \cdots & \cdot & \cdot \cdots & \cdots \\
\cdot & \cdot & \cdot & \cdot & \cdot & \cdot \cdots & \cdot & \cdot \cdots & \cdot & \cdot \cdots & \cdots \\
\cdot & \cdot & \cdot & \cdot & \cdot & \cdot \cdots & \cdot & \cdot \cdots & \cdot & \cdot \cdots & \cdots \\
\frac{\partial g_{22}}{\partial v_{01}} & \frac{\partial g_{22}}{\partial v_{02}} & \frac{\partial g_{22}}{\partial l_1} \cdots & \frac{\partial g_{22}}{\partial l_7} & \frac{\partial g_{22}}{\partial l_p} & \frac{\partial g_{22}}{\partial u_1} \cdots & \frac{\partial g_{22}}{\partial u_6} & \frac{\partial g_{22}}{\partial m_{p1}} \cdots & \frac{\partial g_{22}}{\partial m_{p3}} & \frac{\partial g_{22}}{\partial m_{s1}} \cdots & \frac{\partial g_{22}}{\partial m_{s4}}
\end{bmatrix}$$

ΔX_k is given by

$$\Delta X_k = [\Delta v_{01}\ \Delta v_{02}\ \Delta l_1 \ldots\ldots \Delta l_7\ \Delta l_P\ \Delta u_1 \ldots\ldots \Delta u_6\ \Delta m_{p1} \ldots \Delta m_{p3}\ \Delta m_{s1} \ldots \Delta m_{s4}]^T$$

And f_k is given by

$$f_K = [g_1\ g_2 \ldots\ldots\ldots\ldots\ldots\ldots\ldots\ldots\ldots\ldots\ldots\ldots g_{22}]^T$$

In addition to the above unknowns, the concentration terms can be calculated from

$$X_F - l_j x_j = 0$$

The specified variables are supplied from different correlations. The values for BPR from eqn (3.20), specific heat relation from eqn (3.11) and latent heat of vaporization from eqn (3.29) and temperature or pressure in the last effect is fixed. It is essential to note that the overall heat transfer coefficient (U_j) in the individual effect of the MEE system does not remain constant over the range of variations of different parameters under study. It strongly depends upon heat flux, temperature, concentration, flow rate and various physico-thermal properties of the liquor entering the evaporator. Correlations for U are given in the table (3.3) which is taken from Bhargava (2004).

RESULTS AND DISCUSSIONS

The present chapter embodies the results obtained from the investigation carried out for the range of different operating parameters and its comparison with the data from nearby pulp and paper industry which uses septuple effect flat falling film evaporator(SEFFFE) for concentrating black liquor. The system employed condensate, feed and product flashing and steam splitting. In the present work feed flashing is not used. The schematic diagram of the SEFFFE system is shown in fig 4.6. The detailed simulation results are given in APPENDIX C. A computer program written in 'C' along with sample output files are given in APPENDIX A.

5.1 Validation of the model:

In this section, validation of the model against the data obtained from paper mill is discussed. A sample raw data set from the paper mill is given in APPENDIX B. Figs 5.1 and 5.2 which show the comparison between experimental data obtained from the mill and that generated by simulation for the concentration of the black liquor, vapor body temperature for the different effects.

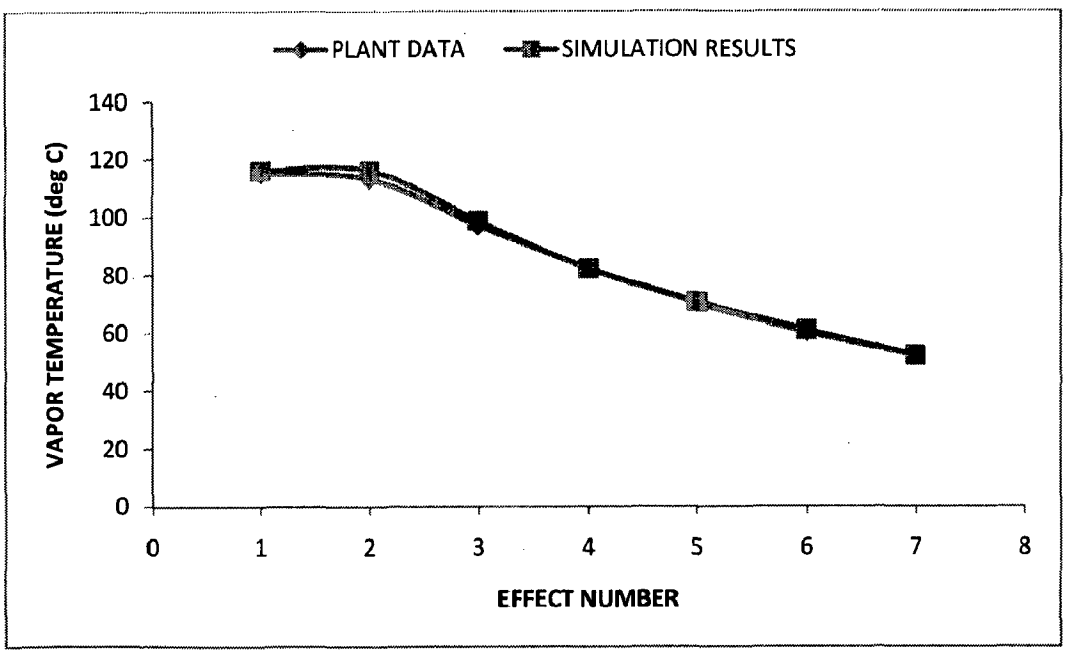

Fig 5.1: comparison of vapor temperatures of different effects from plant data and simulation.

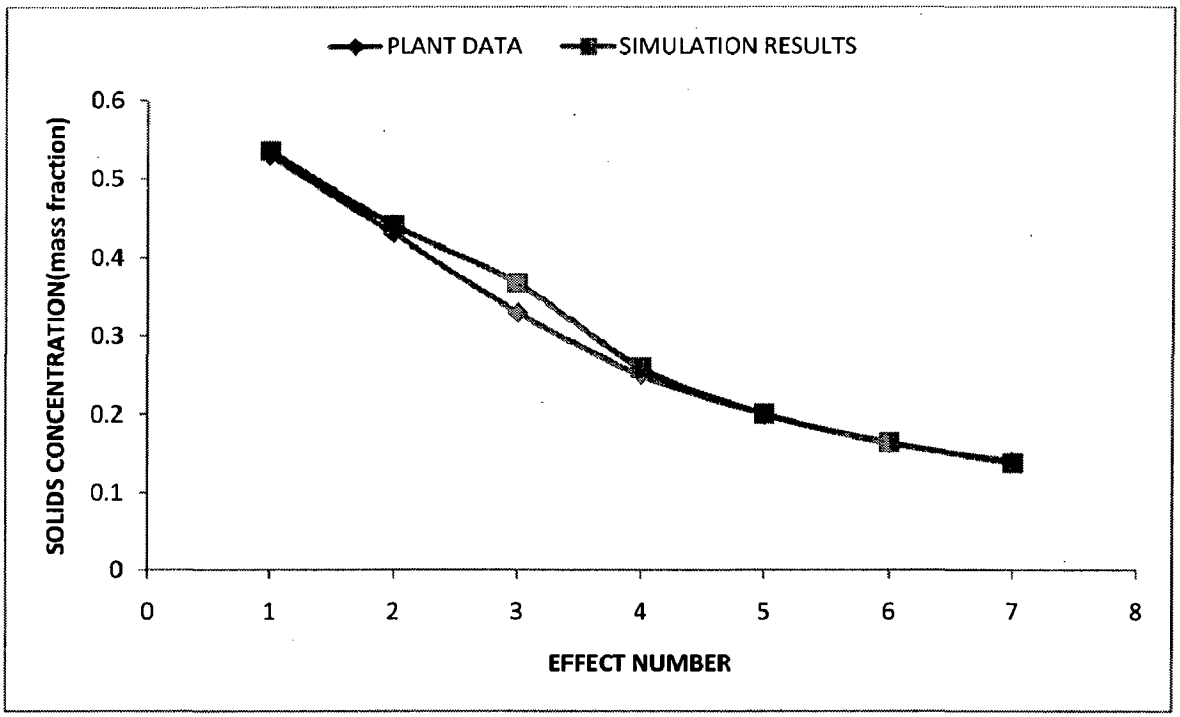

Fig 5.2:Comparison of solids concentration in the liquor from plant data and simulation.

5.2 Influence of Variations of the Input Variables on SC SE and x_P:

The input operating parameters which affect the steam consumption (SC),steam economy (SE) and product concentration (x_P) for the SEFFFE system are T_0, T_L, T_F, x_F and F.

5.2.1 Effect of Variation of T_0 and T_L on SC:

Fig. 5.3 shows the effect of T_0 on SC when T_L varies from 46 to 58 ^{0}C for fixed values of specified parameters F, X_F,T_L at 15.611 kg/s, 0.118 and 64.7 ^{0}C respectively. The following observations can be made from the fig:

- As the steam temperature (T_0) increases the value of steam consumption (SC) increases for all values of last effect temperature (T_L). This is due to the latent heat of condensation of steam with increase in saturation temperature. Also increase in T_0 increases the driving force (ΔT) and hence more rate of heat transfer, which causes more evaporation to take place. Due to more evaporation there will be increase in concentration of the product.

- Increase in T_L keeping T_0 constant the driving force for heat transfer (ΔT) decreases and hence less heat is available for liquor to be heated. This decreases SC and leads to decrease in exit concentration.

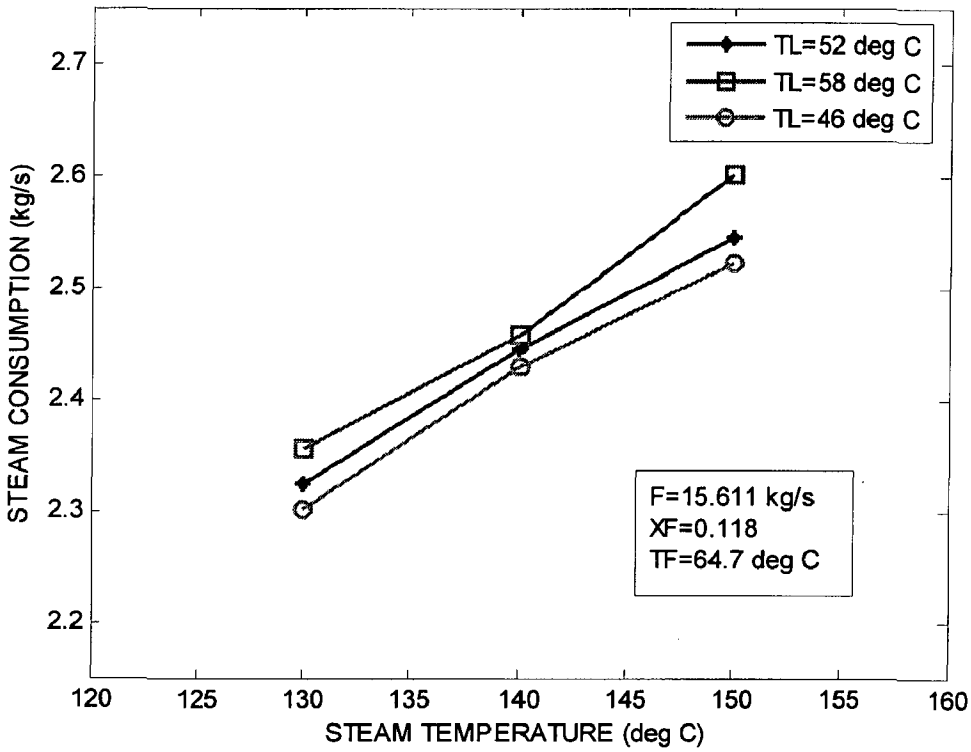

Fig 5.3: To study the effect of T_0 on SC with T_L as a parameter for flow sequence,S1

5.2.2 Effects of Variation of T_0 and T_L on SE:

Fig. 5.4 shows the effect of T_0 on SE when T_L varies from 46 to 58 ^{0}C for fixed values of specified parameters F, X_F, T_F at 15.611 kg/s, 0.118 and 64.7 ^{0}C respectively. The following observations can be made from the fig:

- As the steam temperature (T_0) increases the value of steam economy (SE) decreases for all values of last effect temperature (T_L). With increase in the value of steam temperature, SC increases rapidly and at the same time total water evaporated does not increase in the same ratio. Hence SE decreases with increase in T_0.
- When TL is increased for a given value of T_0, SE decreases since rate of evaporation from the respective effects decreases.

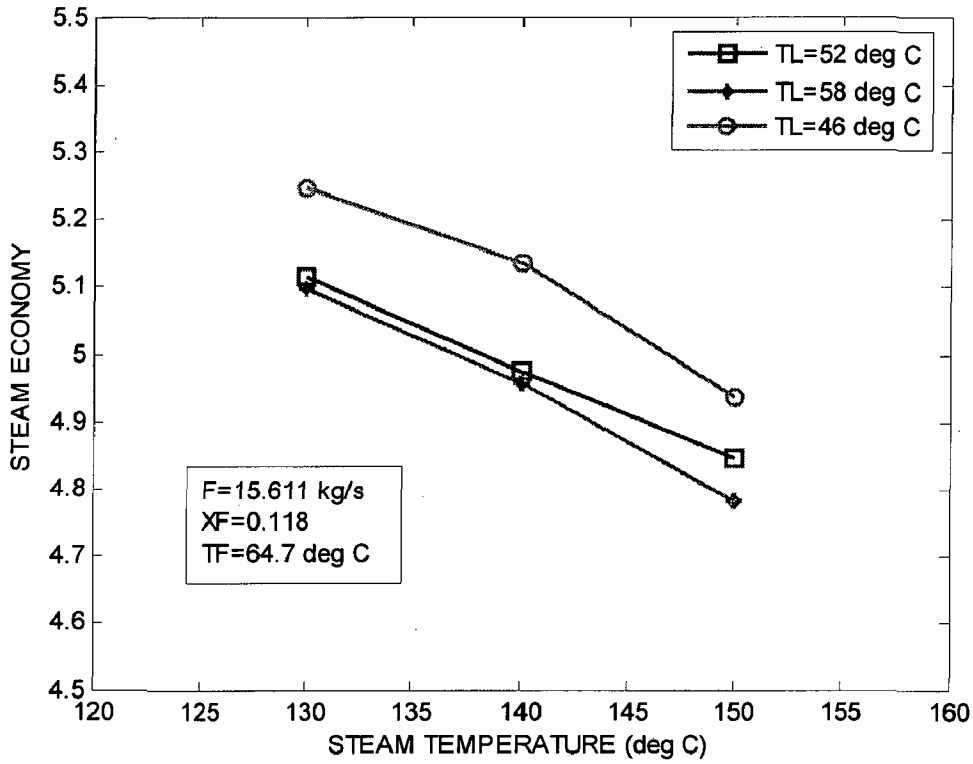

Fig 5.4: To study the effect of T_0 on SE with T_L as a parameter for flow sequence, S1

5.2.3 Effect of Variation of T_0 and T_L on x_P:

Fig 5.5 shows the effect of T_0 on x_P when T_L varies from 46 to 58 ^{0}C for fixed values of specified parameters F, X_F, T_F at 15.611 kg/s, 0.118 and 64.7 ^{0}C respectively. The following observations can be made from the fig:

- Increase in steam temperature (T_0) increases the product concentration (x_P).
- Increase in last effect temperature (T_L) decreases the product concentration (x_P).

As steam temperature (T0) increases, driving force (ΔT) for heat transfer increases, rate of heat transfer will be higher and hence rate of evaporation of water will be more and there will be increase in exit concentration.

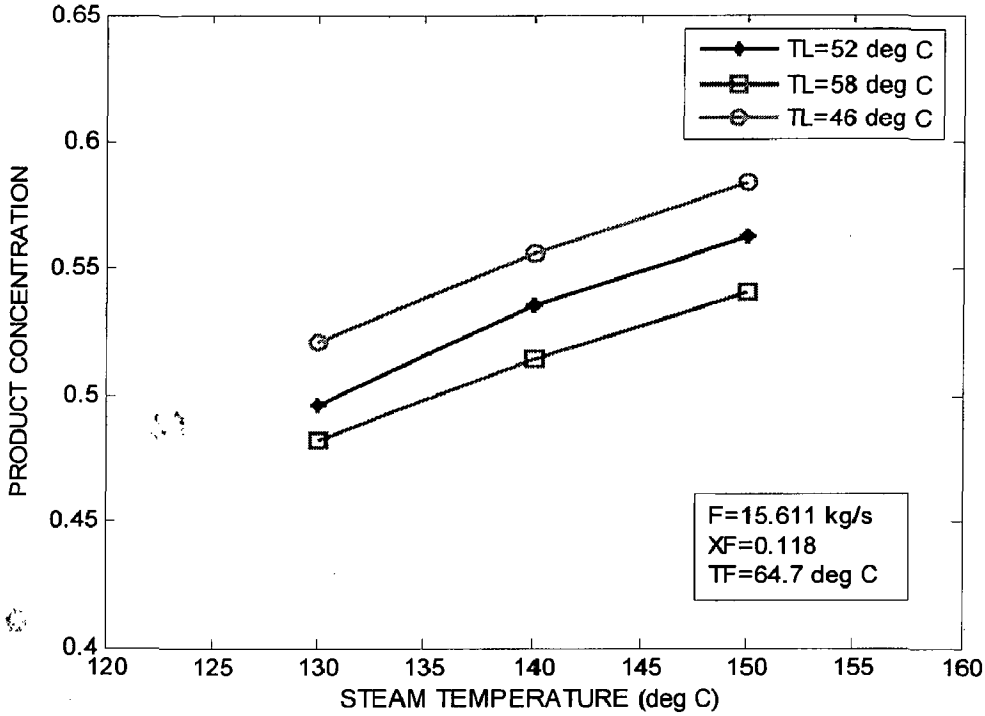

Fig 5.5: To study the effect of T_0 on x_P with T_L as a parameter for flow sequence, S1

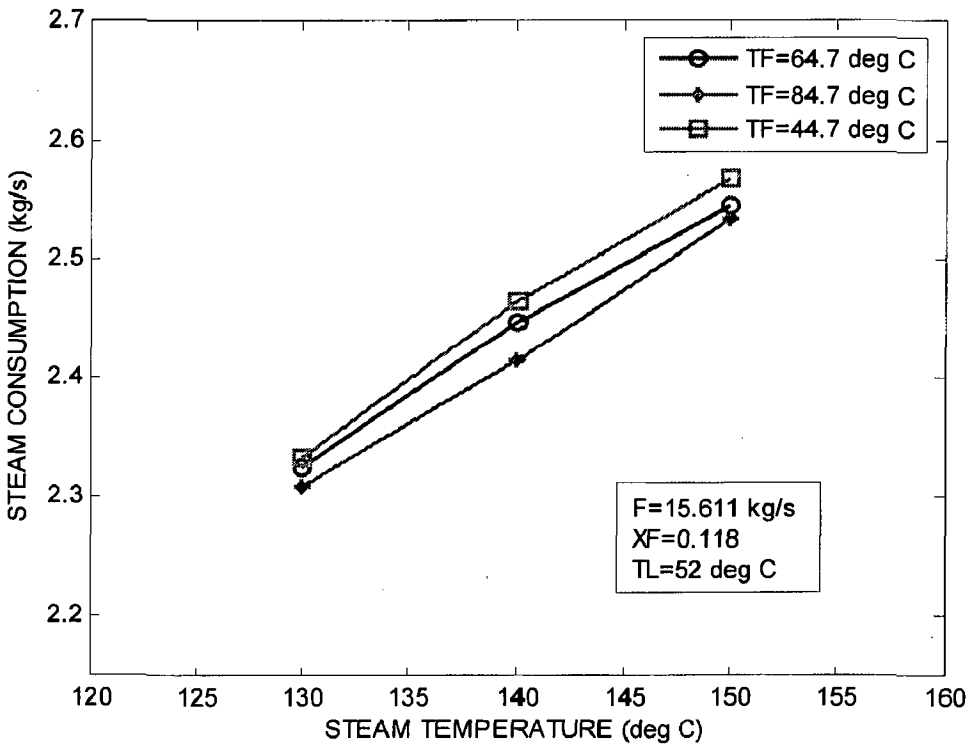

Fig 5.6: To study the effect of T_0 on SC with T_F as a parameter for flow sequence, S1

5.2.4 Effect of Variation of T_0 and T_F on SC:

Fig. 5.6 shows the effect of T_0 on SC when T_F varies from 44.7 to 84.7 ^{0}C for fixed values of specified parameters F, X_F, T_L at 15.611 kg/s, 0.118 and 52 ^{0}C respectively. The following observations can be made from the fig:

- There is a drop in the value of SC with decrease in steam temperature (T_0) and increase in feed temperature (T_F). This can be explained by increase in T_F raises the enthalpy of the feed entering the evaporator thereby reducing the total heat requirements and hence there will be decrease in SC.

5.2.5 Effect of Variation of T_0 and T_F on SE:

Fig. 5.7 shows the effect of T_0 on SE when T_F varies from 44.7 to 84.7 ^{0}C for fixed values of specified parameters F, X_F, T_L at 15.611 kg/s, 0.118 and 52 ^{0}C respectively. The following observations can be made from the fig;

- There is an increase in the value of SE with decrease in steam temperature (T_0) and increase in feed temperature (T_F). This can be explained as increase in T_F raises the enthalpy of the feed entering the evaporator. The amount of vapor generated will be more hence higher SE.

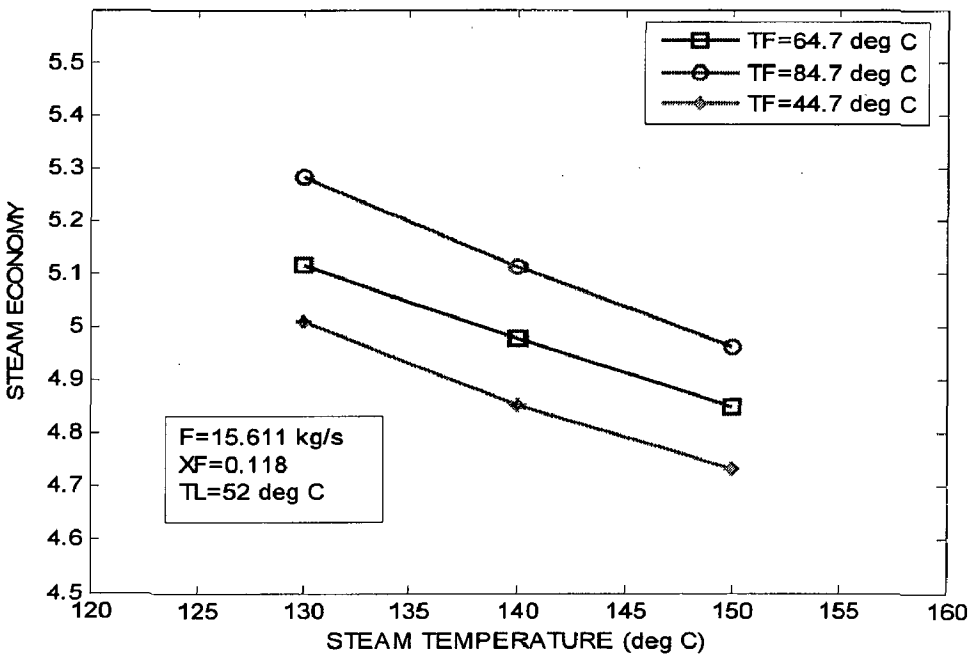

Fig 5.7: To study the effect of T_0 on SE with T_F as a parameter for flow sequence, S1

5.2.6 Effect of Variation of T_0 and T_F on x_P:

Fig. 5.8 shows the effect of T_0 on x_P when T_F varies from 44.7 to 84.7 ^{0}C for fixed values of specified parameters F, X_F, T_L at 15.611 kg/s, 0.118 and 52 ^{0}C respectively. The following observations can be made from the fig;

- As steam temperature (T_0) increases, x_P increases for all values of T_F. This is due to the fact that when T_F increases, enthalpy of the feed increases and hence more evaporation of the water takes place and hence there will be increase in the product concentration (x_P).

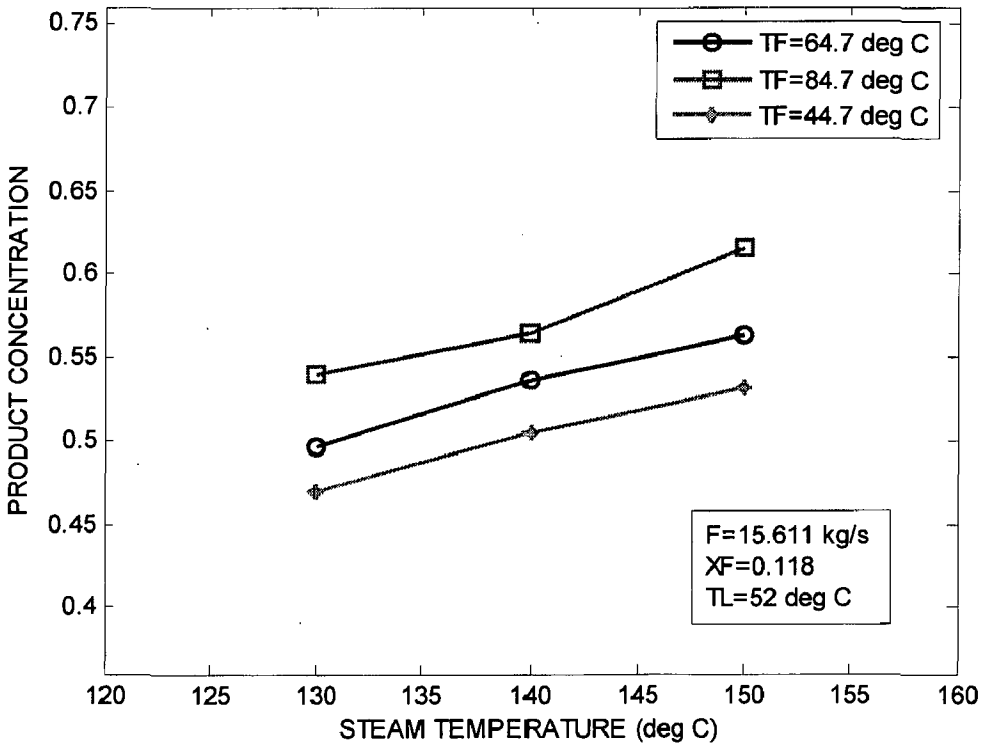

Fig 5.8: To study the effect of T_0 on x_P with T_F as a parameter for flow sequence, S1

5.2.7 Effect of Variation of T_0 and X_F on SC:

Fig. 5.9 shows the effect of T_0 on SC when X_F varies from 0.08 to 0.15 for fixed values of specified parameters F, T_F, T_L at 15.611 kg/s, 64.7 ^{0}C and 52 ^{0}C respectively. The following observations can be made from the fig;

- As steam temperature (T_0) increases, SC increases but exhibit a reverse trend with X_F. This is due to the decrease in the overall heat transfer coefficient (OHTC) as the value of X_F increases and the evaporation capacity goes down to some extent and hence lower SC.

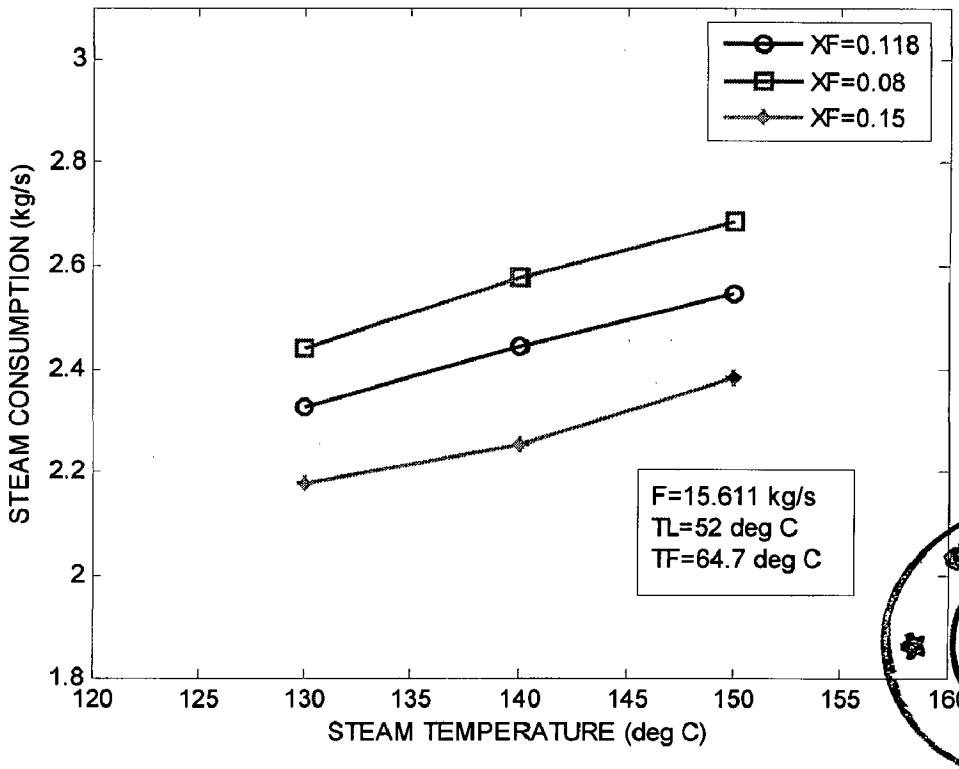

CENTRAL LIBRARY
Acc. No. G13816
Date 24/10/08

Fig 5.9: To study the effect of T_0 on SC with X_F as a parameter for flow sequence, S1

5.2.8 Effect of Variation of T_0 and X_F on SE:

Fig. 5.10 shows the effect of T_0 on SE when X_F varies from 0.08 to 0.15 for fixed values of specified parameters F, T_F, T_L at 15.611 kg/s, 64.7 ^{0}C and 52 ^{0}C respectively. The following observations can be made from the fig;

- As steam temperature (T_0) decreases, SE increases for all values of X_F.

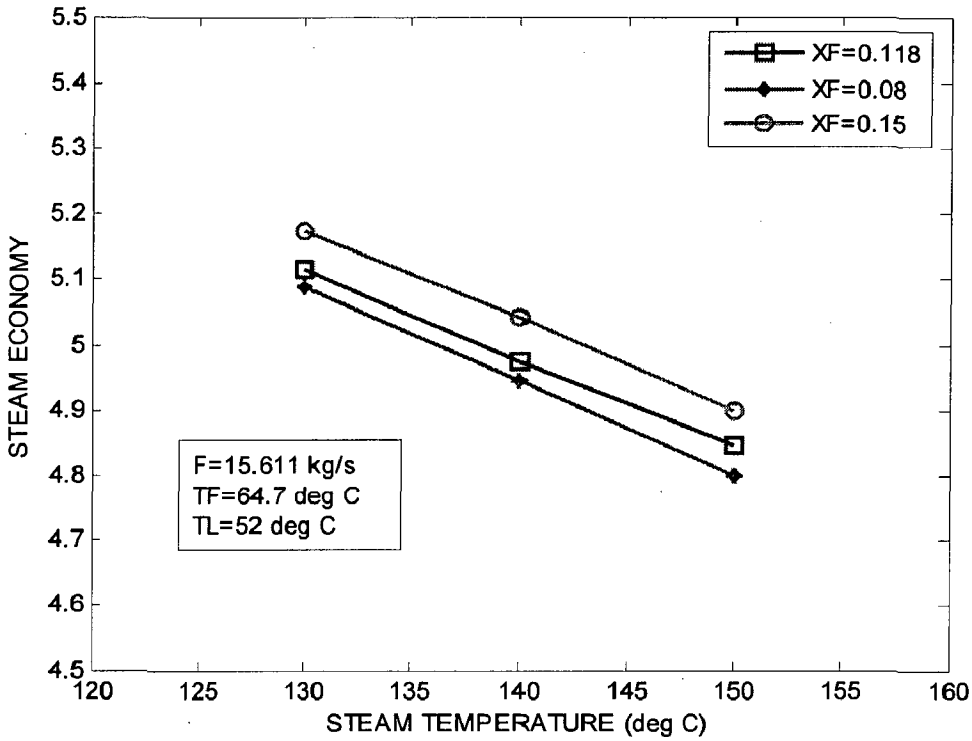

Fig 5.10: To study the effect of T_0 on SC with X_F as a parameter for flow sequence, S1

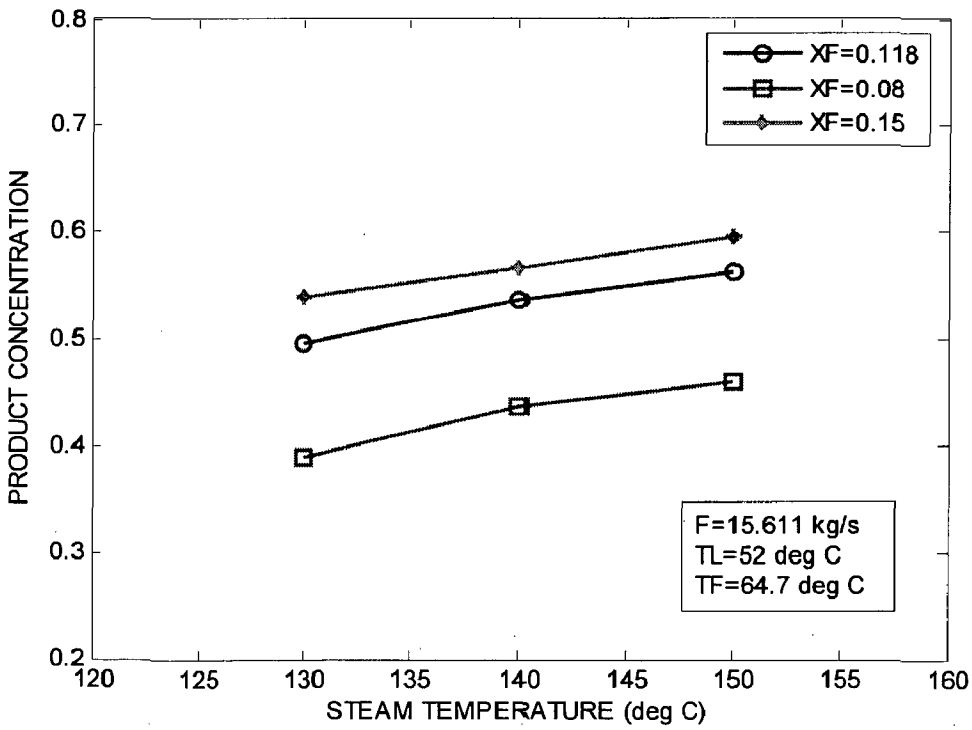

Fig 5.11: To study the effect of T_0 on x_P with X_F as a parameter for flow sequence, S1

5.2.9 Effect of Variation of T_0 and X_F on x_P:

Fig. 5.11 shows the effect of T_0 on SE when X_F varies from 0.08 to 0.15 for fixed values of specified parameters F, T_F, T_L at 15.611 kg/s, 64.7 ^{0}C and 52 ^{0}C respectively. The following observations can be made from the fig;

- As steam temperature (T_0) and X_F increases, product concentration (x_P) increases. As input feed concentration (X_F) increases, obviously output concentration will increase.

5.2.10 Effect of Variation of T_0 and F on SC:

Fig. 5.12 shows the effect of T_0 on SC when F varies from 15.611 to 18.611 kg/s for fixed values of specified parameters X_F, T_F, T_L at 0.118, 64.7 ^{0}C and 52 ^{0}C respectively. The following observations can be made from the fig;

- With increase in steam temperature (T_0), SC increases. This due to the increase in OHTC with increase in the value of F. The UΔT of almost all effects rise with increase in the value of F. This leads to higher SC.

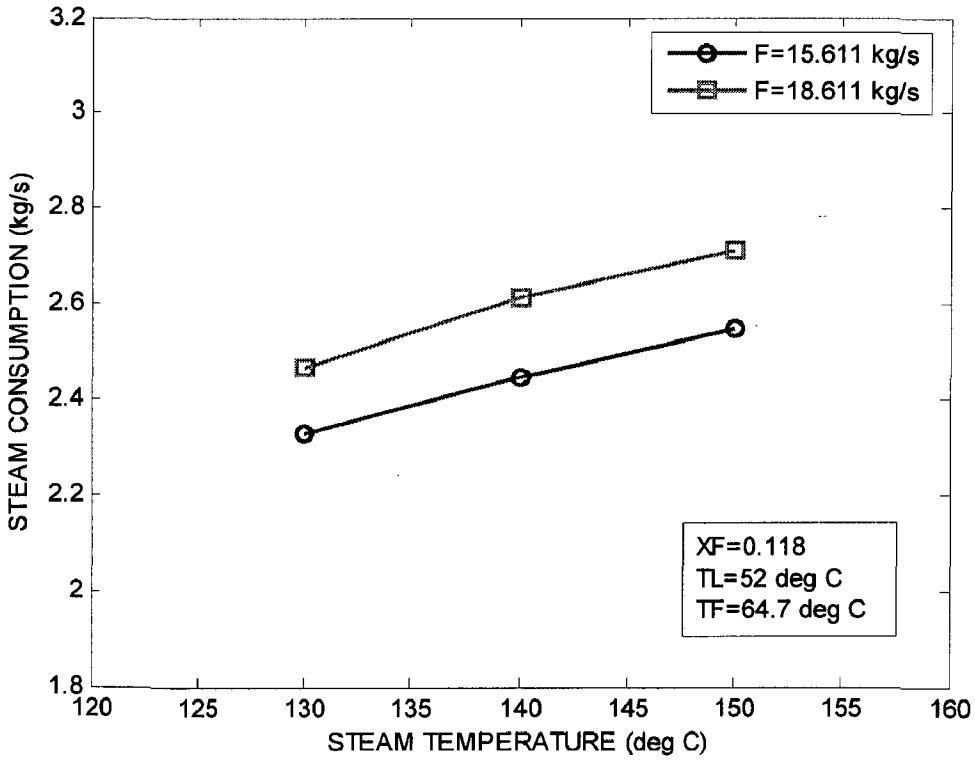

Fig 5.12: To study the effect of T_0 on SC with F as a parameter for flow sequence, S1

5.2.11 Effect of Variation of T_0 and F on SE:

Fig. 5.13 shows the effect of T_0 on SE when F varies from 15.611 to 18.611 kg/s for fixed values of specified parameters X_F, T_F, T_L at 0.118, 64.7 ^{0}C and 52 ^{0}C respectively. The following observations can be made from the fig;

- With increase in steam temperature and F, SE decreases.

This can be explained as with increase in the value of F, SC increases but evaporation of water does not increase in the same proportion. This leads to decrease in the value of SE.

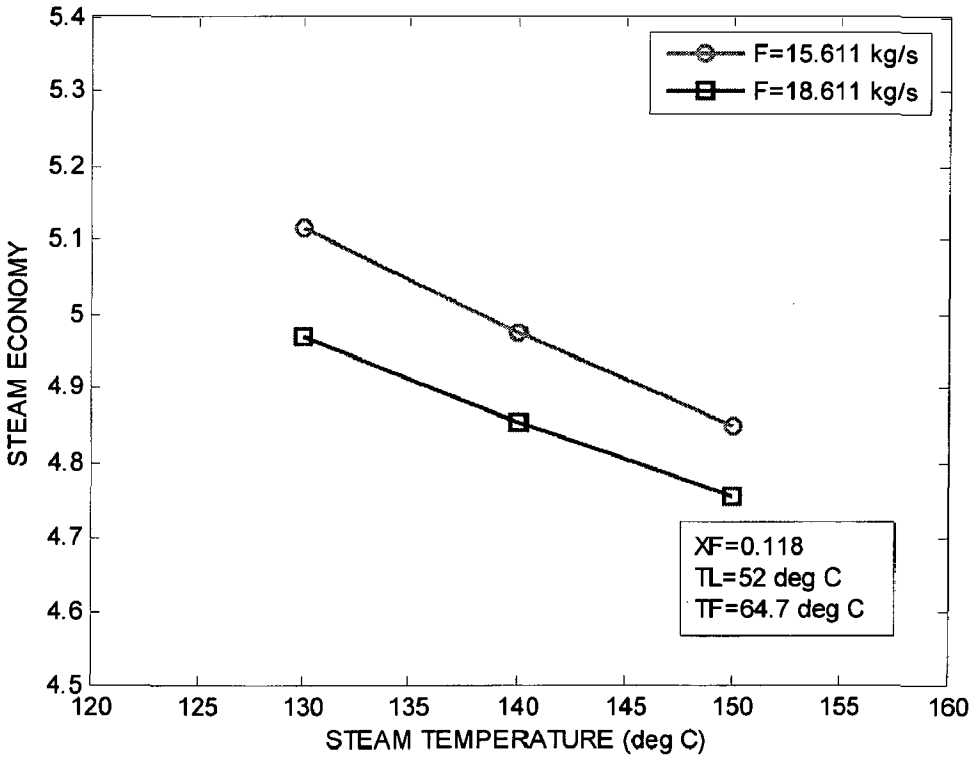

Fig 5.13: To study the effect of T_0 on SC with F as a parameter for flow sequence, S1

5.2.12 Effect of Variation of T_0 and F on x_P:

Fig. 5.14 shows the effect of T_0 on x_P when F varies from 15.611 to 18.611 kg/s for fixed values of specified parameters X_F, T_F, T_L at 0.118, 64.7 ^{0}C and 52 ^{0}C respectively. The following observations can be made from the fig;

- With increase in the value of F, x_P decreases.

As evaporation capacity is somewhat constant when F increases, it is required to evaporate more water to keep x_P constant. As it cannot be done, the value of x_P decreases.

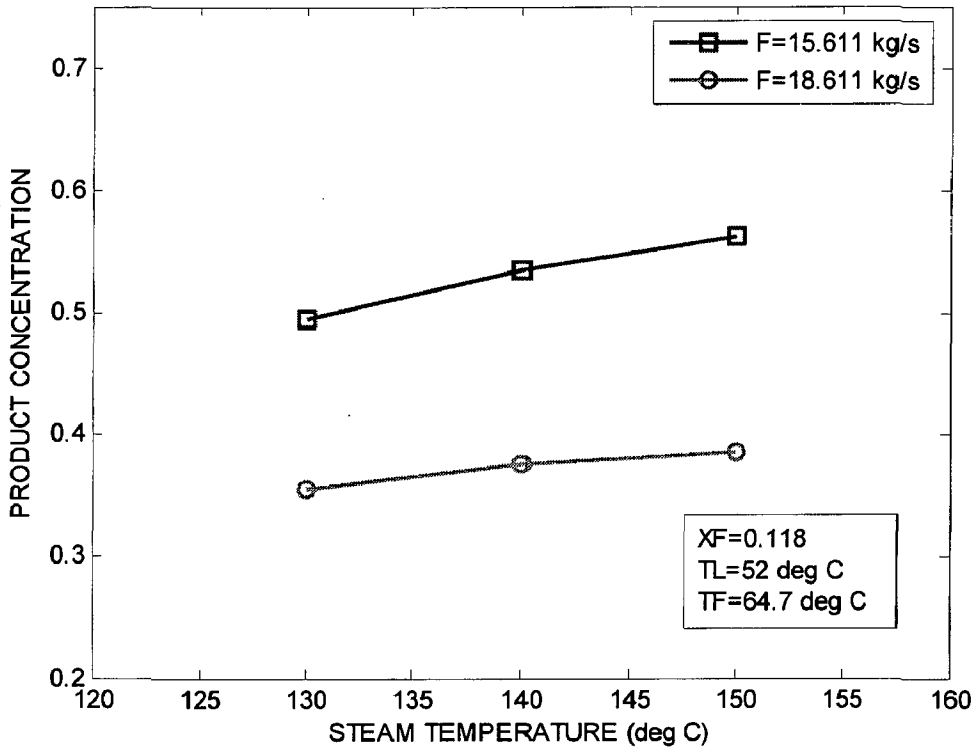

Fig 5.14: To study the effect of T_0 on x_P with F as a parameter for flow sequence, S1

5.3 COMPARISON AMONG ALL THE FEED FLOW SEQUENCES:

Table 5.1: Results of SC and SE for different flow sequences.

Flow sequence (without reheaters)	Steam consumption(SC)	Steam economy(SE)
A	2.445942	4.976237
B	2.485262	4.938467
C	2.503124	4.86177
D	2.579367	4.70015
E	2.781237	4.396363

The values of SC and SE for different flow sequences keeping parameters like F, X_F, T_F, T_L, T_0 fixed at values 15.611 kg/s, 0.118, 64.7 ^{0}C, 52 ^{0}C and 140 ^{0}C respectively. The following facts can be observed:

The value of SC varies from a maximum to minimum in the following order of flow sequences: S5>S4>S3>S2>S1. Hence from the above fact we can conclude that flow sequence S1 is found to be the optimum feed flow sequence (OFFS) which consumes minimum amount of live steam.

The value of SE varies from a maximum to minimum in the following order of flow sequences: S1>S2>S3>S4>S5. Hence flow sequence S1 provides the maximum steam economy and sequence S1 (backward feed) is taken as optimum feed flow sequence (OFFS).

5.4 Effect of Induction of Reheaters in a SEFFFE System:

The flow sequences are further investigated by inducting reheaters. The position of reheaters are given in figs....it should be noted that reheaters use bleed vapor from the evaporators to preheat the liquor before entering the other evaporator and hence do not tax the system.

Table (5.2) Shows the values of SC and SE using reheaters. The maximum number of reheaters which can be used in the system of evaporators depend upon the selected flow sequence. For the computation of SC and SE the specified parameters F, X_F, T_F, T_L, T_0 are kept at 15.611 kg/s, 0.118, 64.7 ^{0}C, 52 ^{0}C and 140 ^{0}C respectively.

Table 5.2: Comparison of SC and SE without and with reheaters.

Feed Flow sequence	Steam consumption(SC) (kg/s)		Steam economy(SE)	
	Without reheaters	With reheaters	Without reheaters	With reheaters
S1	2.445942	2.299528	4.976237	5.313691
S2	2.485262	2.369621	4.938467	5.161636
S3	2.503124	2.464964	4.86177	4.954282

S4	2.579367	2.483169	4.70015	4.849182
S5	2.781237	2.637459	4.396363	4.547948

The following facts are observed from the above table.

- The values of the SC decrease when reheaters are incorporated in the MEE system.
- The values of the SE increase when reheaters are incorporated in the MEE system.

From the above facts it is clear that the addition of reheaters will enhance the values of SE. The reason for the decrease in the values of SC when reheaters are used in comparison with the situation when it is not used can be explained as follows:

When liquor moves in backward feed sequence (S1), it enters into the 7th effect and moves successively to the first effect from where it comes out as a product. In this process its temperature gradually increases from the lowest value (7th effect has lowest temperature) to the highest value available at the 1st effect. To explain the above fact let us consider when liquor flows from 3rd effect (temperature T_{L3}) to 2nd effect (temperature T_{L2}).Obviously (T_{L2}> T_{L3}), in such a situation sensible heat required to raise the temperature of the liquor from T_{L3} to T_{L2} as well as latent heat for evaporation required at 2nd effect are supplied by the live steam. When Reheater is introduced between 2nd and 3rd effect then liquor first heated up to a temperature Tout (eqn 4.21) by the Reheater using a part of the bleed vapor from 2nd effect (V_2). By this arrangement liquor enters into 2nd effect at Tout. The above referred sensible heating is done by vapor at a lower pressure (higher latent heat) than the live steam. As a consequence the amount of live steam required in the 2nd effect is decreased in comparison to when Reheater not used. Thus SC decreases and SE increases.

Chapter 6

CONCLUSIONS AND RECOMMENDATIONS

This chapter explains the conclusions drawn from the present investigation and provides recommendations for future work.

6.1 Conclusions:

Some of the conclusions regarding variation of the values of SC, SE and x_P with the variation of input parameters are given below.

- For the SEFFFE system with backward feed, the value of live steam consumption (SC) increases with increase in values of T_0 and F whereas it decreases with the increase in the values of T_L, T_F, and X_F for the range of operating variables considered.
- The value of steam economy (SE) increases with increase in values of T_F and X_F whereas it decreases with the increase in the values of T_L, T_0, and F for the range of operating variables considered.
- The value of product concentration (x_P) increases with increase in T_0, T_F, and X_F whereas x_P decreases with increase in T_L and F.
- Of all the flow sequences considered, backward feed sequence (S1) is optimum feed flow sequence (OFFS) with minimum SC and maximum SE.
- Use of reheaters at appropriate places in the flow sequence reduces SC and increases SE.
- Increase in feed temperature (T_F) for the base case will increase steam economy, decreases steam consumption and also increases product concentration.

6.2 Recommendations:

- In the present work feed flashing is not used, which can be advantageous with backward feed sequence if feed temperature is higher than the last effect temperature.
- Heat losses from the evaporator and fouling of the tubes inside the evaporator have to be included.
- For enthalpy of saturated liquid and vapor and also for latent heat of vaporization of steam more accurate relations has to be considered to get better results.

REFERENCES

Agarwal, V.K., Alam, M.S., Gupta, S.C.,"Mathematical modelling for existing multiple effect evaporator systems", *Chemical Engineering World*, vol. 39, no. 5, pp: 76-78(2004).

Agarwal,V.K., "Energy conservation in multiple effect evaporator", Ph.D. thesis, department of chemical engineering,U.O.Roorkee,india,(1992).

Alina Jancew-Cudier and Claudio Olivera-Fuentes, "A simplified and generalized method to size multiple effect Evaporator systems with any feed scheme",2nd Mercosur Congress on chemical engineering,4th Mercosur Congress on process systems Engineering, pp:1-10(2004).

Arhippainen,B. and Jungerstam,B., "Kraft liquor evaporation", proc. Conf. On chemical recovery,Helsinki pp:119-136(1968).

Ayangbile, W. O., Okeke, E. O., and Beveridge, G. S. G., "Generalised steady-state cascade simulation algorithm in multiple-effect evaporation", Computers and chemical engineering, Vol 8.No.3/4,pp:235-242,1984.

Badger, W.L., "The First Multiple Effect Evaporator", Industrial And Engineering Chemistry,Vol.20,No.5(1928).

Badger, W.L., and McCabe, W.L., "Elements Of Chemical Engineering", McGraw Hill Book Company Inc.,New York, USA (1936).

Bhargava, R., "simulation of flat falling film evaporator network", Ph.D thesis, Department of chemical engineering, Indian institute of technology, Roorkee, India (2004).

Bhargava, R., Khanam, S., Mohanty, B., Ray, A.K.," Selection of optimal feed flow sequence for a multiple effect evaporator system",Computers and Chemical Engineering,

Bremford, D. J., Muller-Steinhagen, H. M., "Multiple-Effect Evaporator Performance for Black Liquor-2: development of improved steady state models", Appita Journal, v 49, no.5, 320-326, July(1994).

Bremford, D. J., Muller-Steinhagen, H. M.,"Multiple-Effect Evaporator Performance for Black Liquor,1: Simulation of Steady-State Operation for Different Evaporator Arrangements", Appita Journal, v 47, no.4,pp: 320-326, July (1994).

Costa, G. A. A., De Oliveira, E. D., Park, S. W., Cardoso, M.," Overall heat transfer coefficients in a Kraft black liquor industrial evaporation unit. Part I - Simulation of multiple effect evaporation system", Appita Journal, v 60, n 4, p: 321-326, July (2007).

Durmus Kaya and Ibrahim Sarac,H., "Mathematical modelling of multiple effect evaporators and energy economy", Energy 32, pp:.1536-1542(2007).

Edwards, L., Baldus, R.," Evaluation and design of multiple effect evaporation systems for kraft black liquor.", Proceedings of the National Conference on Fluid Power, Annual Meeting,pp:197,1977.

Grace, T.M. and Malcolm," pulp and paper manufacture",vol.5, Alkaline pulping,3rd edition(1989).

Frederick, W.J., D.G. Sachs, H.J. Grady, and T.M. Grace, "Boiling Point Elevation and Solubility Limit for Kraft Black Liquors," *TAPPI*, 63(4), pp:151, April 1980.

Gudmundson, C." Heat transfer in industrial black liquor Evaporator plants", Part-2, Sevensk papperstidning,75,(22),901-908 (1972).

Harvin, R. L.; Brown, W. F., " Specific Heat of Sulfate Black Liquor", TAPPI J. vol.36,no.6, PP: 270(1953).

Holland, C.D., "Fundamentals and modelling of separation processes", Prentice Hall Inc., Englewood cliffs, New Jersey(1975).

Hultin, S.O., "physical properties of Finish sulphite liquors and black Liquors", IUPAC-EUCEPA Symposium on recovery of pulping chemicals, pp:.167-182,Helsinki(1968).

Johan Gullichsen and carl-Johan Fogelbolm, Chemical pulping, Vol.B, chapter 11, pp:12-24.

Kern, D.Q.,Process Heat Transfer, McGraw Hill(1950).

Koorse, G. M., Mehratra, A., Veeramani, H.," Engineering Properties of Spent Pulping Liquors.", *Indian Pulp Pap.*, vol.41, no.4, (June/July), 1977.

Koorse, G.M. and Veeramani, H., "Engineering properties of the black liquor in process design and development of kraft chemical recovery units",IPPTA,vol.30,no.3,PP:9-11,oct-nov,1975.

Kumana, J.D.,"the impact of excess boiling point rise on evaporators and crystallizers", Chem..Engg.prog., pp:10-14,(may 1990).

Lambert,R.N., Joye,D.D. and Koko,F.W.," Design calculations for multiple effect evaporator-1 linear methods", Industrial and engineering chemistry research,vol.26, pp:100-104(1987).

Lambert,R.N., Joye,D.D. and Koko,F.W.," Design calculations for multiple effect evaporator-2:comparison of linear and non-linear methods", industrial and engineering chemistry research,vol.26,PP:104-107(1987).

Mathur, T.N.S.," Energy conservation studies for the multiple effect evaporator house of pulp and paper mills", Ph.D Thesis, Department of chemical engineering, U.O.R, India(1992).

Nishitani, H. and Kunugita, E.," Optimal flow pattern of multiple effect evaporator systems", computers and chemical engineering, vol.3, pp:261-268(1979).

Pares P., J. A.," Representation of the Behaviour of Multiple-Effect Black-Liquor Evaporators", Ing.Quim., vol.22, No.253, pp:159-162,April,1990.

Perry, R.H., Chilton, C.H., Kirkpatrick, S.D., eds., "Chemical Engineers Handbook",4th edition, McGraw Hill, Newyork(1963).

pp:1-14(2007).

Radovic, L.R., Tasic, A.Z., Grozanic, D.K and Valent, V.J.," Computer design and analysis of operation of a multiple effect evaporator system in sugar industry", Industrial and engineering chemistry design and development,vol.18,no.2,pp:318-323(1979).

Rao, N.J., and Kumar, Ram, "Energy conservation approaches in a paper mill with special reference to evaporator plant ",IPPTA international seminar on energy conservation in pulp and paper industry, New Delhi,pp:58-70(1985).

Ray, A. K., Rao,N.J., Bansal, M.C., and Mohanty, B., "design data and correlations of waste/ black liquor from pulp mills", IPPTA J.,Vol.4,No.3,pp:1-21 (1992).

Ray, A.K., Gupta, P.K., Sharma, N.K., Mohanty, B., Singh, Pitam., "Design of black liquor multiple effect evaporator system - Effect of splitting of feed and flash utilization", Journal of Indian Pulp and Paper Technical Association, v 13, n SPEC ISS., p 83-96, 2001.

Ray, A.K., Pitam Singh," Simulation of multiple effect evaporator for black liquor concentration", Journal of Indian Pulp and Paper Technical Association, v 12, n 3, p 53-63, July/September, 2000.

Ray, A.K., Sharma, N.K., and Pitam Singh, "Estimation of energy gains through modelling and simulation of multiple effect evaporator system in a Paper mill", IPPTA journal, Vol 16, No.2 April 2004.

Ray, A.K., Sharma, N.K.," Simulation of multi-effect evaporator for paper mill-effect of flash and product utilization for mixed feeds sequences", Journal of Indian Pulp and Paper Technical Association, v 16, n 4, p 55-65, October/December, 2004.

Regestad, S.O., Svensk Papperstidning Arg,Vol.54,No.3,pp:36(1951).

Singhal, D. K., Bansal, M. C., "Analysis and Simulation of a Multiple-Effect Evaporator System", IPPTA Convention Iss.: 121-127 (Dec. 14-15, 1992).

Steam table and Mollier diagrams (S.I units), Nemchand and brothers, Roorkee (1984).

Stewart, G., and Beveridge, G. S. G.,"Steady-state cascade simulation in multiple effect evaporation", Computers and chemical engineering, Vol .No.1,PP.3-9,1977.

Veeramani, H.," non-wood plant fiber pulping progress report no-9",TAPPI, pp:97-106(1978).

Veeramani, H.,"non-wood plant fiber pulping progress report no-13",TAPPI,pp:35-45(1982).

William, H.P., Saul, A.T., William, T.V., Brian,P.F., "Numerical Recipes in C++", Cambridge University Press, 2nd edition, (2002).

Zain,O.S., and Kumar,S., "Simulation of multiple effect evaporator for concentrating caustic soda solution-computational aspects", Journal of chemical Engg. of japan,Vol 29,No.5(1996).

Zaman, A. A., Tavares, S. A., and Fricke, A. L.," Studies on the Heat Capacity of Slash Pine Kraft Black Liquors: Effects of Temperature and Solids Concentrations", *J. Chem. Eng. Data*, vol. 41,pp; 266-271(1996).

Zaman,A.A., Fricke,A.L.," effects of pulping variables on enthalpy of Kraft black liquor: empirical predictive models ", industrial and engineering chemistry research,vol.35,no.7,PP:2428-2433(1996).

Zaman,A.A., Fricke,A.L.," Newtonian viscosity of high solids kraft black liquors: effect of temperature and solids concentration", industrial and engineering chemistry research,vol.33,no.2,PP:428-435(1994).

Zaman,A.A., Fricke,A.L.,"vapor pressure and boiling point elevation of slash pine black liquors: predictive model with statistical approach ", Industrial and engineering chemistry research,vol.35,no.7,PP:2428-2433(1996).

APPENDIX A

A computer program is discussed in this appendix which is developed in 'C' for the simulation of SEFFFE system. This includes product flashing, steam splitting, condensate flash tanks, and induction of reheaters. This program is executed using Devcpp software.

In this program newt routine requires subsidiary routines, the full dependency tree is given below:

newt uses subroutines which are given below:

- fmin
- fdjac
- ludcmp
- lubksb
- lnsrch

fdjac- jacobian matrix with 1st order derivatives.

ludcmp- LU decomposition.

lubksb- LU back substitution.

lnsrch- line search.

In addition to above subroutines header files nr.h,nrutil.h and nrutil.c has to be included.

/* program for backward feed flow sequence without reheaters */

```
#include <stdio.h>
#include <math.h>
#define NRANSI
#include "nr.h"
#include "nrutil.h"
#include<conio.h>
void funcv(int n,float x[],float f[])
{
float
F=15.611,xf=0.118,G=4.246,H=2512.053,I=2.629,uf=0.6515,T0=140,u7=0.3714,U1=191.75,U2=215.38,U3=589.
29,U4=568.08,U5=698.97,U6=825.56,U7=1014,A1=540,A2=540,A3=660,A4=660,A5=660,A6=660,A7=690,lam0
=2144000,cpf=4184.316,A=1.617,B=2509,C=2496,D=2.026,E=0.0037;
/* equations representing evaporators */
```

```
f[1]=(x[4]*T0)/lam0*((4187*(1-0.0054*(xf/x[4])))*(x[10]+(19.6299*pow((0.1+(xf/x[4])),2))/T0)-(4187*(1-
0.0054*(xf/x[3])))*(x[10]+(19.6299*pow((0.1+(xf/x[3])),2))/T0))+x[1]-(x[3]-
x[2])/lam0*(((A*T0*(x[10]+(19.6299*pow((0.1+(xf/x[3])),2))/T0)+B)*1000)-(4187*(1-
0.0054*(xf/x[3])))*T0*(x[10]+(19.6299*pow((0.1+(xf/x[3])),2))/T0));

f[2]=(U1*A1*T0)/(F*lam0)*(1-(x[10]+(19.6299*pow((0.1+(xf/x[3])),2))/T0))-x[1];

f[3]=(x[5]*T0)/lam0*((4187*(1-0.0054*(xf/x[5])))*(x[11]+(19.6299*pow((0.1+(xf/x[5])),2))/T0)-(4187*(1-
0.0054*(xf/x[4])))*(x[10]+(19.6299*pow((0.1+(xf/x[4])),2))/T0))+x[2]-(x[5]-
x[4])/lam0*(((A*T0*(x[10]+(19.6299*pow((0.1+(xf/x[4])),2))/T0)+B)*1000)-(4187*(1-
0.0054*(xf/x[4])))*T0*(x[10]+(19.6299*pow((0.1+(xf/x[4])),2))/T0));

f[4]=(U2*A2*T0)/(F*lam0)*(1-(x[10]+(19.6299*pow((0.1+(xf/x[4])),2))/T0))-x[2];

f[5]=(x[6]*T0)/lam0*((4187*(1-0.0054*(xf/x[6])))*(x[12]+(19.6299*pow((0.1+(xf/x[6])),2))/T0)-(4187*(1-
0.0054*(xf/x[5])))*(x[11]+(19.6299*pow((0.1+(xf/x[5])),2))/T0))+(x[4]-x[3])/lam0*((C-D*x[10]*T0-
E*SQR(x[10]*T0))*1000)+(x[5]-x[4])/lam0*((C-D*x[10]*T0-E*SQR(x[10]*T0))*1000)-(x[6]-
x[5])/lam0*(((A*T0*(x[11]+(19.6299*pow((0.1+(xf/x[5])),2))/T0)+B)*1000)-(4187*(1-
0.0054*(xf/x[5])))*T0*(x[11]+(19.6299*pow((0.1+(xf/x[5])),2))/T0));

f[6]=(U3*A3*T0)/(F*lam0)*(x[10]-(x[11]+(19.6299*pow((0.1+(xf/x[5])),2))/T0))-(x[4]-x[3])/lam0*((C-
D*x[10]*T0-E*SQR(x[10]*T0))*1000)-(x[5]-x[4])/lam0*((C-D*x[10]*T0-E*SQR(x[10]*T0))*1000);

f[7]=(x[7]*T0)/lam0*(((4187*(1-0.0054*(xf/x[7])))*(x[13]+(19.6299*pow((0.1+(xf/x[7])),2))/T0))-(4187*(1-
0.0054*(xf/x[6])))*(x[12]+(19.6299*pow((0.1+(xf/x[6])),2))/T0))+ (x[6]-x[5]+x[15]+x[18]+x[3]-x[22])/lam0*((C-
D*x[11]*T0-E*SQR(x[11]*T0))*1000)-(x[7]-
x[6])/lam0*(((A*T0*(x[12]+(19.6299*pow((0.1+(xf/x[6])),2))/T0)+B)*1000)-(4187*(1-
0.0054*(xf/x[6])))*T0*(x[12]+(19.6299*pow((0.1+(xf/x[6])),2))/T0));

f[8]=(U4*A4*T0)/(F*lam0)*(x[11]-(x[12]+(19.6299*pow((0.1+(xf/x[6])),2))/T0))-(x[6]-
x[5]+x[15]+x[18])/lam0*((C-D*x[11]*T0-E*SQR(x[11]*T0))*1000);

f[9]=(x[8]*T0)/lam0*(((4187*(1-0.0054*(xf/x[8])))*(x[14]+(19.6299*pow((0.1+(xf/x[8])),2))/T0))-(4187*(1-
0.0054*(xf/x[7])))*(x[13]+(19.6299*pow((0.1+(xf/x[7])),2))/T0))+ (x[7]-x[6]+x[16]+x[19])/lam0*((C-D*x[12]*T0-
E*SQR(x[12]*T0))*1000)-(x[8]-x[7])/lam0*(((A*T0*(x[13]+(19.6299*pow((0.1+(xf/x[7])),2))/T0)+B)*1000)-
(4187*(1-0.0054*(xf/x[7])))*T0*(x[13]+(19.6299*pow((0.1+(xf/x[7])),2))/T0));

f[10]=(U5*A5*T0)/(F*lam0)*(x[12]-(x[13]+(19.6299*pow((0.1+(xf/x[7])),2))/T0))-(x[7]-
x[6]+x[16]+x[19])/lam0*((C-D*x[12]*T0-E*SQR(x[12]*T0))*1000);

f[11]=(x[9]*T0)/lam0*(((4187*(1-0.0054*(xf/x[9])))*(u7+(19.6299*pow((0.1+(xf/x[9])),2))/T0))-(4187*(1-
0.0054*(xf/x[8])))*(x[14]+(19.6299*pow((0.1+(xf/x[8])),2))/T0))+ (x[8]-x[7]+x[17]+x[20])/lam0*((C-D*x[13]*T0-
E*SQR(x[13]*T0))*1000)-(x[9]-x[8])/lam0*(((A*T0*(x[14]+(19.6299*pow((0.1+(xf/x[8])),2))/T0)+B)*1000)-
(4187*(1-0.0054*(xf/x[8])))*T0*(x[14]+(19.6299*pow((0.1+(xf/x[8])),2))/T0));

f[12]=(U6*A6*T0)/(F*lam0)*(x[13]-(x[14]+(19.6299*pow((0.1+(xf/x[8])),2))/T0))-(x[8]-
x[7]+x[17]+x[20])/lam0*((C-D*x[13]*T0-E*SQR(x[13]*T0))*1000);

f[13]=(T0)/lam0*(cpf*uf-(4187*(1-0.0054*(xf/x[9])))*(u7+(19.6299*pow((0.1+(xf/x[9])),2))/T0))+(x[9]-
x[8]+x[21])/lam0*((C-D*x[14]*T0-E*SQR(x[14]*T0))*1000)-(1-
x[9])/lam0*(((A*T0*(u7+(19.6299*pow((0.1+(xf/x[9])),2))/T0)+B)*1000)-(4187*(1-
0.0054*(xf/x[9])))*(u7+(19.6299*pow((0.1+(xf/x[9])),2))/T0));

f[14]=(U7*A7*T0)/(F*lam0)*(x[14]-(u7+(19.6299*pow((0.1+(xf/x[9])),2))/T0))-(x[9]-x[8]+x[21])/lam0*((C-
D*x[14]*T0-E*SQR(x[14]*T0))*1000);
```

```
f[15]=(x[1]+x[2])/lam0*(G*T0*(1-x[11]))-x[15]/lam0*(H-(I*x[11]*T0));          /* primary and secondary
condensate flash tanks*/

f[16]=(x[1]+x[2]-x[15])/lam0*(G*T0*(x[11]-x[12]))-(x[16]/lam0)*(H-(I*x[12]*T0));

f[17]=(x[1]+x[2]-x[15]-x[16])/lam0*(G*T0*(x[12]-x[13]))-(x[17]/lam0)*(H-(I*x[13]*T0));

f[18]=(x[5]-x[3])/lam0*(G*T0*(x[10]-x[11]))-(x[18]/lam0)*(H-(I*x[11]*T0));

f[19]=(x[6]-x[3]+x[15])/lam0*(G*T0*(x[11]-x[12]))-(x[19]/lam0)*(H-(I*x[12]*T0));

f[20]=(x[7]-x[3]+x[15]+x[16])/lam0*(G*T0*(x[12]-x[13]))-(x[20]/lam0)*(H-(I*x[13]*T0));

f[21]=(x[8]-x[3]+x[15]+x[16]+x[17])/lam0*(G*T0*(x[13]-x[14]))-(x[21]/lam0)*(H-(I*x[14]*T0));

f[22]=(x[3]*T0)/lam0*((4187*(1-0.0054*(xf/x[3])))*(x[10]+(19.6299*pow((0.1+(xf/x[3])),2))/T0)-(4187*(1-
0.0054*(xf/x[22])))*(x[11]+(19.6299*pow((0.1+(xf/x[22])),2))/T0))-(x[3]-
x[22])/lam0*(((A*T0*(x[11]+(19.6299*pow((0.1+(xf/x[22])),2))/T0)+B)*1000)-(4187*(1-
0.0054*(xf/x[22])))*T0*(x[11]+(19.6299*pow((0.1+(xf/x[22])),2))/T0));   /* product flash tank */

}
#define N 22
int main(void)
{
 float F=15.611,T0=140,u7=0.3714,xf=0.118 ;
 int i,check;
  float *x,*f;
  x=vector(1,N);  f=vector(1,N);

        x[1]=0.05;  x[2]=0.10;  x[3]=0.324; x[4]=.44; x[5]=0.3;  x[6]=0.44;  x[7]=0.35;  x[8]=0.54;
        x[9]=0.46;  x[10]=0.41;  x[11]=.54;  x[12]=.43;  x[13]=.33;  x[14]=.232;  x[15]=0.072;
        x[16]=.065;  x[17]=.085;  x[18]=0.072;  x[19]=.087;  x[20]=.098;  x[21]=.076;  x[22]=0.32;
   newt (x,N,&check,funcv);
funcv(N,x,f);
        if (check) printf("Convergence problems.\n");
        printf("%7s %3s %12s\n","Index","x","f");
        for (i=1;i<=N;i++)
        printf("%5d %12.6f %12.6f\n",i,x[i],f[i]);
        printf("\nflowrate of steam to effect1 V01(kg/s) :%f\n",x[1]*F);
        printf("flowrate of steam to effect2  V02(kg/s) :%f\n",x[2]*F);
        printf("LIQUOR FLOWRATES  \n");
        printf("flowrate of liquor from effect1 L1(kg/s) :%f\n",x[3]*F);
        printf("flowrate of liquor from effect2 L2(kg/s) :%f\n",x[4]*F);
        printf("flowrate of liquor from effect3 L3(kg/s) :%f\n",x[5]*F);
        printf("flowrate of liquor from effect4 L4(kg/s) :%f\n",x[6]*F);
        printf("flowrate of liquor from effect5 L5(kg/s) :%f\n",x[7]*F);
        printf("flowrate of liquor from effect6 L6(kg/s) :%f\n",x[8]*F);
        printf("flowrate of liquor from effect7 L7(kg/s) :%f\n",x[9]*F);
        printf("flowrate of liquor after product flash(kg/s) :%f\n",x[22]*F);
        printf("VAPOR TEMPERATURES  \n");
        printf("temperature of vapour from effect1,2 T1,T2(deg C) :%f\n",x[10]*T0);
        printf("temperature of vapour from effect3 T3(deg C) :%f\n",x[11]*T0);
        printf("temperature of vapour from effect4 T4(deg C) :%f\n",x[12]*T0);
        printf("temperature of vapour from effect5 T5(deg C) :%f\n",x[13]*T0);
```

```
printf("temperature of vapour from effect6 T6(deg C) :%f\n",x[14]*T0);
printf("temperature of vapour from effect7 T7(deg C) :%f\n",u7*T0);
printf("LIQUOR CONC. \n");
printf("concentration of liquor from effect1 x1 : %f\n",xf/x[3]);
printf("concentration of liquor from effect2 x2 : %f\n",xf/x[4]);
printf("concentration of liquor from effect3 x3 : %f\n",xf/x[5]);
printf("concentration of liquor from effect4 x4 : %f\n",xf/x[6]);
printf("concentration of liquor from effect5 x5 : %f\n",xf/x[7]);
printf("concentration of liquor from effect6 x6 : %f\n",xf/x[8]);
printf("concentration of liquor from effect7 x7 : %f\n",xf/x[9]);
printf("concentration of liquor after product flash xp : %f\n",xf/x[22]);
printf("LIQUOR TEMPERATURES \n");
printf("temperature of liquor from effect1 t1(deg C)
:%f\n",(x[10]*T0+(19.6299*pow((0.1+(xf/x[3])),2))));
printf("temperature of liquor from effect1 t2(deg C)
:%f\n",(x[10]*T0+(19.6299*pow((0.1+(xf/x[4])),2))));
printf("temperature of liquor from effect3 t3(deg C)
:%f\n",(x[11]*T0+(19.6299*pow((0.1+(xf/x[5])),2))));
printf("temperature of liquor from effect4 t4(deg C)
:%f\n",(x[12]*T0+(19.6299*pow((0.1+(xf/x[6])),2))));
printf("temperature of liquor from effect5 t5(deg C)
:%f\n",(x[13]*T0+(19.6299*pow((0.1+(xf/x[7])),2))));
printf("temperature of liquor from effect6 t6(deg C)
:%f\n",(x[14]*T0+(19.6299*pow((0.1+(xf/x[8])),2))));
printf("temperature of liquor from effect7 t7(deg C) :%f\n",(u7*T0+(19.6299*pow((0.1+(xf/x[9])),2))));
printf("CONDENSATE FLOWRATES \n");
printf("flowrate of primary condensate flash vapour from tank1 Mpcft1(kg/s): %f\n",x[15]*F);
printf("flowrate of primary condensate flash vapour from tank2 Mpcft2(kg/s):
%f\n",x[16]*F);
printf("flowrate of primary condensate flash vapour from tank3 Mpcft3(kg/s):
%f\n",x[17]*F);
printf("flowrate of secondary condensate flash vapour from tank1 Mscft1(kg/s): %f\n",x[18]*F);
printf("flowrate of secondary condensate flash vapour from tank2 Mscft2(kg/s):%f\n",x[19]*F);
printf("flowrate of secondary condensate flash vapour from tank3 Mscft3(kg/s):%f\n",x[20]*F);
printf("flowrate of secondary condensate flash vapour from tank4 Mscft4(kg/s):%f\n",x[21]*F);
printf("flowrate of product flash vapour(kg/s): %f\n",(x[3]-x[22])*F);
printf("VAPOUR FLOWRATES \n");
printf("flowrate of vapour from effect1 V1(kg/s) :%f\n",(x[4]-x[3])*F);
printf("flowrate of vapour from effect2 V2(kg/s) :%f\n",(x[5]-x[4])*F);
printf("flowrate of vapour from effect3 V3(kg/s) :%f\n",(x[6]-x[5])*F);
printf("flowrate of vapour from effect4 V4(kg/s) :%f\n",(x[7]-x[6])*F);
printf("flowrate of vapour from effect5 V5(kg/s) :%f\n",(x[8]-x[7])*F);
printf("flowrate of vapour from effect6 V6(kg/s) :%f\n",(x[9]-x[8])*F);
printf("flowrate of vapour from effect7 V7(kg/s) :%f\n",(1-x[9])*F);
printf("STEAM CONSUMPTION(V0)=    %f\n",(x[1]+x[2])*F);
printf("STEAM ECONOMY =  %f\n",(1-x[3])/(x[1]+x[2]));
free_vector(f,1,N);
free_vector(x,1,N);
getch();
```

```
        return 0;
}
#undef NRANSI
```

/* routine for newt */

```
#include <math.h>
#define NRANSI
#include "nrutil.h"
#define MAXITS 200
#define TOLF 1.0e-4
#define TOLMIN 1.0e-6
#define TOLX 1.0e-7
#define STPMX 100.0
int nn;
float *fvec;
void (*nrfuncv)(int n, float v[], float f[]);
#define FREERETURN {free_vector(fvec,1,n);free_vector(xold,1,n);\
        free_vector(p,1,n);free_vector(g,1,n);free_matrix(fjac,1,n,1,n);\
        free_ivector(indx,1,n);return;}
        void newt(float x[], int n, int *check,
        void (*vecfunc)(int, float [], float []))
{
void fdjac(int n, float x[], float fvec[], float **df,
void (*vecfunc)(int, float [], float []));
float fmin(float x[]);
void lnsrch(int n, float xold[], float fold, float g[], float p[], float x[],
 float *f, float stpmax, int *check, float (*func)(float []));
void lubksb(float **a, int n, int *indx, float b[]);
void ludcmp(float **a, int n, int *indx, float *d);
int i,its,j,*indx;
float d,den,f,fold,stpmax,sum,temp,test,**fjac,*g,*p,*xold;

indx=ivector(1,n);
fjac=matrix(1,n,1,n); g=vector(1,n); p=vector(1,n); xold=vector(1,n); fvec=vector(1,n);
nn=n; nrfuncv=vecfunc; f=fmin(x); test=0.0;
        for (i=1;i<=n;i++)
                if (fabs(fvec[i]) > test) test=fabs(fvec[i]);
        if (test<0.01*TOLF) FREERETURN
        for (sum=0.0,i=1;i<=n;i++) sum += SQR(x[i]);
        stpmax=STPMX*FMAX(sqrt(sum),(float)n);
        for (its=1;its<=MAXITS;its++)
        {
                fdjac(n,x,fvec,fjac,vecfunc);
                for (i=1;i<=n;i++)
                {
                        for (sum=0.0,j=1;j<=n;j++) sum += fjac[j][i]*fvec[j];
                        g[i]=sum;
                }
                for (i=1;i<=n;i++) xold[i]=x[i];
```

```
                fold=f;
                for (i=1;i<=n;i++) p[i] = -fvec[i];
                ludcmp(fjac,n,indx,&d);
                lubksb(fjac,n,indx,p);
                lnsrch(n,xold,fold,g,p,x,&f,stpmax,check,fmin);
                test=0.0;
                for (i=1;i<=n;i++)
                        if (fabs(fvec[i]) > test) test=fabs(fvec[i]);
                if (test < TOLF)
              {
                        *check=0;
                        FREERETURN
                }
                if (*check)
              {
                        test=0.0;
                        den=FMAX(f,0.5*n);
                        for (i=1;i<=n;i++)
                      {
                                temp=fabs(g[i])*FMAX(fabs(x[i]),1.0)/den;
                                if (temp > test) test=temp;
                        }
                        *check=(test < TOLMIN ? 1 : 0);
                        FREERETURN
                }
                test=0.0;


                  for (i=1;i<=n;i++)
                  {
                        temp=(fabs(x[i]-xold[i]))/FMAX(fabs(x[i]),1.0);
                        if (temp > test) test=temp;
                    }
                if (test < TOLX) FREERETURN
        }
        nrerror("MAXITS exceeded in newt");
}
#undef MAXITS
#undef TOLF
#undef TOLMIN
#undef TOLX
#undef STPMX
#undef FREERETURN
#undef NRANSI


/* routine for fdjac */

  #include <math.h>
  #define NRANSI
```

```
#include "nrutil.h"
#define EPS 1.0e-4
void fdjac(int n, float x[], float fvec[], float **df,
void (*vecfunc)(int, float [], float []))
{
        int i,j;
        float h,temp,*f;
        f=vector(1,n);
        for (j=1;j<=n;j++)
        {
                temp=x[j];
                h=EPS*fabs(temp);
                if (h == 0.0) h=EPS;
                x[j]=temp+h;
                h=x[j]-temp;
                (*vecfunc)(n,x,f);
                x[j]=temp;
                for (i=1;i<=n;i++) df[i][j]=(f[i]-fvec[i])/h;
        }
        free_vector(f,1,n);
}
#undef EPS
#undef NRANSI
```

/* routine for fmin */

```
#define NRANSI
#include "nrutil.h"
extern int nn;
extern float *fvec;
extern void (*nrfuncv)(int n, float v[], float f[]);
float fmin(float x[])
{
        int i;
        float sum;
        (*nrfuncv)(nn,x,fvec);
        for (sum=0.0,i=1;i<=nn;i++) sum += SQR(fvec[i]);
        return 0.5*sum;
}
#undef NRANSI
```

/* routine for line search */

```
#include <math.h>
#define NRANSI
#include "nrutil.h"
#define ALF 1.0e-4
```

```
#define TOLX 1.0e-7
/**
 *
 * @param n
 * @param xold[]
 * @param fold
 * @param g[]
 * @param p[]
 * @param x[]
 * @param f
 * @param stpmax
 * @param check
 * @param (* func)(float [])
 */
void lnsrch(int n, float xold[], float fold, float g[], float p[], float x[],
        float *f, float stpmax, int *check, float (*func)(float []))
{
        int i;
        float a,alam,alam2,alamin,b,disc,f2,fold2,rhs1,rhs2,slope,sum,temp,
                test,tmplam;
        *check=0;
        for (sum=0.0,i=1;i<=n;i++) sum += p[i]*p[i];
        sum=sqrt(sum);
        if (sum > stpmax)
                for (i=1;i<=n;i++) p[i] *= stpmax/sum;
        for (slope=0.0,i=1;i<=n;i++)
                slope += g[i]*p[i];
        test=0.0;
        for (i=1;i<=n;i++)
        {
                temp=fabs(p[i])/FMAX(fabs(xold[i]),1.0);
                if (temp > test) test=temp;
        }
        alamin=TOLX/test;
        alam=1.0;
        for (;;)
        {
                for (i=1;i<=n;i++) x[i]=xold[i]+alam*p[i];
                *f=(*func)(x);
                if (alam < alamin)
                {
                        for (i=1;i<=n;i++) x[i]=xold[i];
                        *check=1;
                        return;
                } else if (*f <= fold+ALF*alam*slope) return;
                else {
                        if (alam == 1.0)
                                tmplam = -slope/(2.0*(*f-fold-slope));
                        else {
```

```
                        rhs1 = *f-fold-alam*slope;
                        rhs2=f2-fold2-alam2*slope;
                        a=(rhs1/(alam*alam)-rhs2/(alam2*alam2))/(alam-alam2);
                b=(-alam2*rhs1/(alam*alam)+alam*rhs2/(alam2*alam2))/(alam- alam2);

                        if (a == 0.0) tmplam = -slope/(2.0*b);

                        else
                    {
                            disc=b*b-3.0*a*slope;
                            if (disc<0.0) nrerror("Roundoff problem in lnsrch.");
                            else tmplam=(-b+sqrt(disc))/(3.0*a);
                        }
                        if (tmplam>0.5*alam)
                            tmplam=0.5*alam;
                }
            }
            alam2=alam;
            f2 = *f;
            fold2=fold;
            alam=FMAX(tmplam,0.1*alam);
        }
}
#undef ALF
#undef TOLX
#undef NRANSI

/* routine for Lu back substitution */

void lubksb(float **a, int n, int *indx, float b[])
{
        int i,ii=0,ip,j;
        float sum;
        for (i=1;i<=n;i++)
        {
            ip=indx[i];
            sum=b[ip];
            b[ip]=b[i];
            if (ii)
            for (j=ii;j<=i-1;j++) sum -= a[i][j]*b[j];
            else if (sum) ii=i;
            b[i]=sum;
        }
        for (i=n;i>=1;i--)
        {
            sum=b[i];
            for (j=i+1;j<=n;j++) sum -= a[i][j]*b[j];
            b[i]=sum/a[i][i];
        }
}
```

/ routine for LU decomposition */*

```
#include <math.h>
#define NRANSI
#include "nrutil.h"
#define TINY 1.0e-20;
void ludcmp(float **a, int n, int *indx, float *d)
{
        int i,imax,j,k;
        float big,dum,sum,temp;
        float *vv;
        vv=vector(1,n);
        *d=1.0;
        for (i=1;i<=n;i++)
        {
                big=0.0;
                for (j=1;j<=n;j++)
                if ((temp=fabs(a[i][j])) > big) big=temp;
                if (big == 0.0) nrerror("Singular matrix in routine ludcmp");
                vv[i]=1.0/big;
        }
        for (j=1;j<=n;j++)
        {
                for (i=1;i<j;i++)
                {
                        sum=a[i][j];
                        for (k=1;k<i;k++) sum -= a[i][k]*a[k][j];
                        a[i][j]=sum;
                }
                big=0.0;
                for (i=j;i<=n;i++)
                {
                        sum=a[i][j];
                        for (k=1;k<j;k++)
                        sum -= a[i][k]*a[k][j];
                        a[i][j]=sum;
                        if ( (dum=vv[i]*fabs(sum)) >= big)
                        {
                                big=dum;
                                imax=i;
                        }
                }
                if (j != imax)
                {
                        for (k=1;k<=n;k++)
                        {
                                dum=a[imax][k];
                                a[imax][k]=a[j][k];
                                a[j][k]=dum;
```

```
                        }
                        *d = -(*d);
                        vv[imax]=vv[j];
                }
                indx[j]=imax;
                if (a[j][j] == 0.0) a[j][j]=TINY;
                if (j != n)
                {
                        dum=1.0/(a[j][j]);
                        for (i=j+1;i<=n;i++) a[i][j] *= dum;
                }
        }
        free_vector(vv,1,n);
}
#undef TINY
#undef NRANSI
```

Sample output file:

```
Flow rate of steam to effect1 V01(kg/s) :0.883368
Flow rate of steam to effect2 V02(kg/s) :1.562574
LIQUOR FLOWRATES
Flow rate of liquor from effect1 L1(kg/s) :3.439512
Flow rate of liquor from effect2 L2(kg/s) :4.178876
Flow rate of liquor from effect3 L3(kg/s) :5.02233
Flow rate of liquor from effect4 L4(kg/s) :7.110602
Flow rate of liquor from effect5 L5(kg/s) :9.166242
Flow rate of liquor from effect6 L6(kg/s) :11.210244
Flow rate of liquor from effect7 L7(kg/s) :13.343194
Flow rate of liquor after product flash(kg/s) :3.380791
VAPOR TEMPERATURES
Temperature of vapour from effect1,2 T1,T2(deg C) :115.956376
Temperature of vapour from effect3 T3(deg C) :98.479866
Temperature of vapour from effect4 T4(deg C) :81.920358
Temperature of vapour from effect5 T5(deg C) :70.474285
Temperature of vapour from effect6 T6(deg C) :60.703062
Temperature of vapour from effect7 T7(deg C) :51.996000
LIQUOR CONC.
Concentration of liquor from effect1 x1 : 0.535573
Concentration of liquor from effect2 x2 : 0.440815
Concentration of liquor from effect3 x3 : 0.366784
Concentration of liquor from effect4 x4 : 0.259065
Concentration of liquor from effect5 x5 : 0.200967
Concentration of liquor from effect6 x6 : 0.164324
Concentration of liquor from effect7 x7 : 0.138056
Concentration of liquor after product flash xp : 0.544872
LIQUOR TEMPERATURES
Temperature of liquor from effect1 t1(deg C) :123.346293
Temperature of liquor from effect1 t2(deg C) :118.697739
Temperature of liquor from effect3 t3(deg C) :102.756968
Temperature of liquor from effect4 t4(deg C) :84.451199
Temperature of liquor from effect5 t5(deg C) :72.25238
Temperature of liquor from effect6 t6(deg C) :62.074546
```

Temperature of liquor from effect7 t7(deg C) :53.10844
CONDENSATE FLOWRATES
Flow rate of primary condensate flash vapour from tank1 Mpcft1(kg/s): 0.175514
Flow rate of primary condensate flash vapour from tank2 Mpcft2(kg/s):0.083182
Flow rate of primary condensate flash vapour from tank3 Mpcft3(kg/s):0.058566
Flow rate of secondary condensate flash vapour from tank1 Mscft1(kg/s): 0.08982
Flow rate of secondary condensate flash vapour from tank2 Mscft2(kg/s):0.149375
Flow rate of secondary condensate flash vapour from tank3 Mscft3(kg/s):0.163922
Flow rate of secondary condensate flash vapour from tank4 Mscft4(kg/s):0.177539
Flow rate of product flash vapour(kg/s): 0.058721
VAPOUR FLOWRATES
Flow rate of vapour from effect1 V1(kg/s) :0.739364
Flow rate of vapour from effect2 V2(kg/s) :0.843456
Flow rate of vapour from effect3 V3(kg/s) :2.08827
Flow rate of vapour from effect4 V4(kg/s) :2.055641
Flow rate of vapour from effect5 V5(kg/s) :2.044001
Flow rate of vapour from effect6 V6(kg/s) :2.13295
Flow rate of vapour from effect7 V7(kg/s) :2.267906
STEAM CONSUMPTION (V0) = 2.445942;
STEAM ECONOMY = 4.976237

APPENDIX B

B.1 Sample raw data set from paper mill:

Table B.1: paper mill data for septuple effect falling film evaporator system (Bhargava,2004).

Effect/flash	Feed	Feed flash	7	6	5	4	3	2	1	Product flash
Vapor temperature, ^{0} C		60.0	52.0	60.0	70.0	82.0	97.0	113.0	115.0	97.0
Steam temperature, ^{0} C			60.0	70.0	82.0	97.0	114.0	147.0	140	
Liquor temperature, ^{0} C	64.7	61.0	53.0	61.5	72.0	84.0	100.0	119.0	123.0	105.0
Liquor inlet concentration	0.118	0.118	0.119	0.14	0.163	0.20	0.25	0.33	0.43	
Liquor outlet concentration		0.119	0.14	0.163	0.2	0.25	0.33	0.43	0.53	
Steam inlet flow rate, kg/h								5200	3600	
Vapor outlet flow rate, kg/h		350	8250	6800	6900	7100	6700	4800	2700	320
Liquor inlet flow rate, kg/h		56200	55850	47600	40800	33900	26800	20100	15300	12600
Liquor outlet flow rate, kg/h	56200	55850	47600	40800	33900	26800	20100	15300	12600	12280
Area , m^2			690	660	660	660	660	540	540	

Data for obtaining correlation for Boiling point rise (BPR):

Table B.2: Concentration Vs BPR data.

S.no	Concentration	BPR (^{0}C)
1	0.0767	0.6
2	0.091	0.7
3	0.106	0.8
4	0.13	1.1
5	0.169	1.4
6	0.244	2.3
7	0.369	4.3
8	0.462	6.2
9	0.47	6.4

	FEED TEMPERATURE (TF=64.7 deg C)			TF=84.7 deg C			TF=44.7 deg C		
	STEAM TEMPERATURE (deg C)			STEAM TEMPERATURE (deg C)			STEAM TEMPERATURE (deg C)		
	130	140	150	130	140	150	130	140	150
V01	0.604835	0.883368	1.1779694	0.688255	0.928367	1.288682	0.893155	1.0035	1.213742
V02	1.696618	1.562574	1.367104	1.620366	1.486905	1.254316	1.439832	1.461305	1.353086
L1	3.715603	3.439512	3.273326	3.417273	3.265003	2.994468	3.923013	3.653999	3.465887
L2	4.6643	4.178876	3.893007	4.458241	4.115328	3.737014	4.801403	4.127498	4.033268
L3	5.071631	5.02233	5.023709	5.004563	4.851929	4.887528	5.100332	5.066006	5.163656
L4	7.213524	7.110602	7.108445	7.111107	6.833051	6.864632	7.300872	7.183624	7.312958
L5	9.300179	9.166242	9.160547	9.18126	8.821969	8.857728	9.444279	9.259424	9.437867
L6	11.350608	11.210244	11.200646	11.221935	10.777653	10.8326644	11.547013	11.334598	11.542833
L7	13.393727	13.343194	13.333601	13.35163	12.728703	12.893553	13.640357	13.59925	13.748015
Lp	3.610491	3.380791	3.208598	3.349798	3.196433	2.961391	3.826822	3.572353	3.398824
T1,T2	110.133017	115.956376	119.650966	112.27238	116.74956	118.275386	110.975186	113.763343	118.605251
T3	95.853298	98.479866	102.261302	94.466995	99.906451	101.453134	94.849544	96.171268	103.19438
T4	81.275315	81.920358	85.720137	77.930545	83.793356	85.243356	78.712082	79.436915	86.289659
T5	68.017523	70.474285	73.961766	66.676837	70.997127	73.560852	67.978292	69.363691	74.24638
T6	56.91083	60.703062	64.421377	56.961684	60.303304	64.025617	58.675658	60.596097	64.400648
T7	48.282	51.996	55.71	48.282	51.996	55.71	48.282	51.996	55.71
X1	0.495777	0.535573	0.562764	0.539055	0.564195	0.615167	0.469562	0.504132	0.531494
X2	0.394938	0.440815	0.473184	0.413192	0.447622	0.492936	0.383661	0.446302	0.456729
X3	0.363218	0.366784	0.366683	0.368086	0.379665	0.377673	0.361175	0.363622	0.356745
X4	0.255369	0.259065	0.259144	0.259047	0.269588	0.268348	0.252314	0.256432	0.251897
X5	0.198073	0.200967	0.201092	0.200638	0.208809	0.207966	0.19505	0.198944	0.195183
X6	0.162292	0.164324	0.164465	0.164153	0.170919	0.170051	0.159531	0.162521	0.159589
X7	0.137535	0.138056	0.138155	0.140169	0.144721	0.142871	0.135049	0.135457	0.133991
Xp	0.510207	0.544872	0.574113	0.549913	0.576298	0.622038	0.481365	0.515654	0.541981
τ1	119.576329	123.346293	128.93162	125.193515	125.477945	128.884369	118.339241	124.097173	129.452349
τ2	114.406055	118.697739	122.100178	117.44229	119.636359	122.176737	112.765518	119.621801	124.689481
τ3	99.065312	102.756968	106.536561	98.767996	104.422878	105.932115	103.097817	100.390619	107.289496

τ4	83.754317	84.451199	88.252086	80.461126	86.474711	87.906745	84.387638	81.930769	88.720455
τ5	69.761586	72.25238	75.741338	68.45105	72.869098	75.422617	70.12656	71.11797	75.95679
τ6	58.261307	62.074546	65.794322	58.331391	61.744085	65.457181	58.410214	61.948935	65.723437
τ7	49.389578	53.10844	56.823369	49.393625	53.171602	56.867892	49.366509	53.084279	56.784772
MPCFT1	0.138592	0.175514	0.191177	0.151898	0.186963	0.210292	0.140833	0.185336	0.200347
MPCFT2	0.0796	0.083182	0.088154	0.07624	0.072458	0.080835	0.075557	0.083884	0.08967
MPCFT3	0.0564	0.058566	0.056707	0.058964	0.054654	0.053168	0.054161	0.05895	0.060384
MSCFT1	0.074595	0.08982	0.0753	0.098075	0.069848	0.074309	0.081421	0.092002	0.018946
MSCFT2	0.141179	0.149375	0.148916	0.138547	0.13068	0.138953	0.150645	0.158898	0.154685
MSCFT3	0.164946	0.163922	0.170242	0.159139	0.150403	0.160378	0.174171	0.166751	0.175337
MSCFT4	0.178344	0.177539	0.182841	0.174642	0.16292	0.17192	0.18781	0.179986	0.188598
PFT	0.105112	0.058721	0.067428	0.067475	0.06857	0.033077	0.096191	0.081646	0.067063
V1	0.948698	0.739364	0.619681	1.040968	0.850325	0.742546	0.87839	0.473499	0.567381
V2	0.407331	0.843456	1.130702	0.546321	0.736601	1.140514	0.298929	0.938507	1.130388
V3	2.141894	2.08827	2.084736	2.106545	1.981122	1.987104	2.20054	2.117618	2.149302
V4	2.086654	2.055641	2.052102	2.070153	1.988918	1.993096	2.143407	2.0758	2.124909
V5	2.050429	2.044001	2.040099	2.040675	1.955685	1.974936	2.102734	2.075174	2.104966
V6	2.043119	2.13295	2.132956	2.129694	1.95105	2.060889	2.093345	2.264652	2.205182
V7	2.217373	2.267906	2.277499	2.25947	2.882397	2.717547	1.970743	2.01185	1.863085
SC	**2.324761**	**2.445942**	**2.545074**	**2.308621**	**2.415272**	**2.542998**	**2.332987**	**2.464805**	**2.566828**
SE	**5.116869**	**4.976237**	**4.847708**	**5.281866**	**5.111681**	**4.961323**	**5.009924**	**4.851135**	**4.731603**

TABLE B.3: RESULTS SHOWING THE EFFECT OF T_0 AND T_F ON SC, SE AND x_P WHEN F=15.611 kg/s, X_F=0.118 AND T_L=52 deg C

	LAST EFFECT TEMPERATURE (TL=52 deg C)			TL=58 deg C			TL=46 deg C		
	STEAM TEMPERATURE (deg C)			STEAM TEMPERATURE (deg C)			STEAM TEMPERATURE (deg C)		
	130	140	150	130	140	150	130	140	150
V01	0.604835	0.883368	1.1779694	0.847637	0.839401	0.953593	1.078728	1.119514	1.189583
V02	1.696618	1.562574	1.367104	1.508795	1.614284	1.647586	1.2229416	1.310513	1.333017
L1	3.715603	3.439512	3.273326	3.595257	3.384743	3.170859	3.536966	3.313042	3.154709
L2	4.6643	4.178876	3.893007	4.416114	4.376498	4.3334485	4.291658	4.346227	4.421238
L3	5.071631	5.02233	5.023709	5.20216	5.056873	5.205664	5.137481	5.341052	5.130449
L4	7.213524	7.110602	7.108445	7.305425	7.163359	7.2897	7.177716	7.633188	7.131689
L5	9.300179	9.166242	9.160547	9.313872	9.166829	9.339333	9.203113	9.522963	9.182751
L6	11.350608	11.210244	11.200646	11.370433	11.279484	11.396377	11.217044	11.418245	11.204196
L7	13.393727	13.343194	13.333601	13.496524	13.442617	13.518301	13.258171	13.358211	13.228572
Lp	3.610491	3.380791	3.208598	3.512177	3.317695	3.094242	3.467505	3.256074	3.075125
T1,T2	110.133017	115.956376	119.650966	115.33025	116.33025	118.529732	106.267483	112.239493	116.72242
T3	95.853298	98.479866	102.261302	97.592673	101.777755	108.276558	88.615947	92.579347	98.471761
T4	81.275315	81.920358	85.720137	81.520357	85.419462	92.045707	72.408293	77.197378	81.98998
T5	68.017523	70.474285	73.961766	72.78675	77.319068	81.300992	61.812023	64.757912	68.856539
T6	56.91083	60.703062	64.421377	62.473072	66.785816	70.743003	51.212328	54.132568	57.834497
T7	48.282	51.996	55.71	53.858999	58.00199	62.144999	42.71799	46.00399	49.289998
X1	0.495777	0.535573	0.562764	0.482369	0.514339	0.540946	0.520813	0.556014	0.58392
X2	0.394938	0.440815	0.473184	0.417131	0.42091	0.424989	0.42923	0.423841	0.476966
X3	0.363218	0.366784	0.366683	0.354105	0.364278	0.353866	0.358563	0.344896	0.359054
X4	0.255369	0.259065	0.259144	0.252156	0.257157	0.2527	0.256643	0.241329	0.258299
X5	0.198073	0.200967	0.201092	0.197781	0.200954	0.197242	0.200162	0.193439	0.200605
X6	0.162292	0.164324	0.164465	0.162009	0.163315	0.16164	0.164224	0.16133	0.164413
X7	0.137535	0.138056	0.138155	0.136488	0.137035	0.136268	0.138941	0.137901	0.139252
Xp	0.510207	0.544872	0.574113	0.504489	0.525494	0.555331	0.531246	0.565742	0.599032
τ1	119.576329	123.346293	128.93162	119.53623	125.873511	128.79839	117.339241	123.541358	127.61803
τ2	114.4060553	118.697739	122.100178	113.603064	121.697791	122.110035	111.765518	117.626125	123.25702
τ3	99.065312	102.756968	106.536561	101.640578	106.009068	112.320214	92.74372	96.464749	102.60839

τ4	83.754317	84.451199	88.252086	83.954742	87.923478	94.487618	74.905101	79.484369	840510034
τ5	69.761586	72.25238	75.741338	74.527406	79.097011	83.03535	63.580618	66.448169	70.630368
τ6	58.261307	62.074546	65.794322	63.820637	68.146852	72.086777	52.582778	55.473164	59.206901
τ7	49.389578	53.10844	56.823369	54.95683	59.104917	63.240789	43.838729	47.114989	50.413647
MPCFT1	0.138592	0.175514	0.191177	0.144001	0.129917	0.209842	0.191199	0.228729	0.24456
MPCFT2	0.0796	0.083182	0.088154	0.089859	0.083837	0.091505	0.086924	0.047444	0.086158
MPCFT3	0.0564	0.058566	0.056707	0.0741162	0.043831	0.081652	0.07553	0.04989	0.078497
MSCFT1	0.074595	0.08982	0.0753	0.089262	0.112471	0.079406	0.06881	0.064436	0.07346
MSCFT2	0.141179	0.149375	0.148916	0.147542	0.163273	0.14297	0.129778	0.158392	0.134718
MSCFT3	0.164946	0.163922	0.170242	0.148065	0.175888	0.156892	0.137502	0.164251	0.147674
MSCFT4	0.178344	0.177539	0.182841	0.18011	0.201722	0.177955	0.163898	0.182533	0.169612
PFT	0.105112	0.058721	0.067428	0.08308	0.070498	0.076617	0.069461	0.056968	0.079584
V1	0.948698	0.739364	0.619681	0.820857	0.929065	1.1625895	0.754692	1.215807	1.266529
V2	0.407331	0.843456	1.130702	0.786046	0.680374	0.871179	0.845822	0.994825	0.709211
V3	2.141894	2.08827	2.084736	2.103265	2.106486	2.084035	2.040235	2.292136	2.00124
V4	2.086654	2.055641	2.052102	2.008447	2.003471	2.049633	2.025397	1.889775	2.051063
V5	2.050429	2.044001	2.040099	2.056561	2.112654	2.057044	2.013931	1.895782	2.02144
V6	2.043119	2.13295	2.132956	2.126092	2.163134	2.121924	2.041127	1.939967	2.024376
V7	2.217373	2.267906	2.277499	2.114476	2.1681483	2.092799	2.352929	2.252889	2.382528
SC	**2.324761**	**2.445942**	**2.545074**	**2.356432**	**2.453685**	**2.601179**	**2.301669**	**2.430027**	**2.522601**
SE	**5.116869**	**4.976237**	**4.847708**	**5.099126**	**4.95717**	**4.782141**	**5.245815**	**5.136231**	**4.937916**

TABLE B.4: RESULTS SHOWING THE EFFECT OF T_0 AND T_L ON SC, SE AND x_p WHEN F=15.611 kg/s, X_F=0.118, T_F=64.7 deg C.

	FEED CONCENTRATION (XF=0.118)			XF=0.08			XF=0.15		
	STEAM TEMPERATURE (deg C)			STEAM TEMPERATURE (deg C)			STEAM TEMPERATURE (deg C)		
	130	140	150	130	140	150	130	140	150
V01	0.604835	0.883368	1.1779694	1.054604	1.134683	1.190259	0.688255	0.85053	1.370827
V02	1.696618	1.562574	1.367104	1.387128	1.441921	1.496496	1.48944	1.403068	1.01371
L1	3.715603	3.439512	3.273326	3.215489	2.867811	2.718591	4.343991	4.140937	3.931285
L2	4.6643	4.178876	3.893007	4.09837	3.705336	3.675608	5.405571	5.211159	5.042589
L3	5.071631	5.02233	5.023709	4.979011	4.940976	4.970117	6.361693	6.18605	6.118829
L4	7.213524	7.110602	7.108445	7.079711	7.036569	7.016734	8.703498	8.516456	8.21202
L5	9.300179	9.166242	9.160547	9.180412	9.145338	9.12738	10.350383	10.180569	9.96461
L6	11.350608	11.210244	11.200646	11.239566	11.212179	11.198082	12.060848	11.874598	11.734754
L7	13.393727	13.343194	13.333601	13.293229	13.274657	13.263914	13.696342	13.632398	13.55223
Lp	3.610491	3.380791	3.208598	3.186894	2.821416	2.645024	4.227469	4.032885	3.823795
T1,T2	110.133017	115.95638	119.65097	112.518894	116.454343	118.995738	112.27238	116.55009	119.18057
T3	95.853298	98.479866	102.2613	95.973967	99.7457999	102.610034	94.466995	96.435735	101.66582
T4	81.275315	81.920358	85.720137	80.516866	84.250201	87.172347	77.930545	82.176338	86.827934
T5	68.017523	70.474285	73.961766	67.500782	71.286278	74.581647	66.676837	70.210369	74.445784
T6	56.91083	60.703062	64.421377	56.786972	60.507109	63.967225	56.961684	59.916446	63.879253
T7	48.282	51.996	55.71	48.282	51.996	55.71	48.282	51.996	55.71
X1	0.495777	0.535573	0.562764	0.388395	0.435482	0.459395	0.539055	0.565488	0.595645
X2	0.394938	0.440815	0.473184	0.304726	0.337049	0.339775	0.433192	0.449353	0.464375
X3	0.363218	0.366784	0.366683	0.252232	0.25276	0.251278	0.368086	0.39783	0.382696
X4	0.255369	0.259065	0.259144	0.176403	0.177484	0.177986	0.269047	0.274956	0.285149
X5	0.198073	0.200967	0.201092	0.136037	0.136559	0.136828	0.226238	0.230012	0.234997
X6	0.162292	0.164324	0.164465	0.111115	0.111386	0.111526	0.194153	0.197198	0.199548
X7	0.137535	0.138056	0.138155	0.093949	0.09408	0.094156	0.170969	0.171771	0.172787
Xp	0.510207	0.544872	0.574113	0.39188	0.442643	0.472162	0.553913	0.580639	0.612389
t1	119.576329	123.34629	128.93162	119.248093	123.100101	125.316291	119.19352	124.56136	127.57803

τ2	114.406055	118.69774	122.10018	115.734337	117.203887	120.792202	114.44229	119.94725	121.69043
τ3	99.065312	102.75697	106.53656	98.409393	102.188533	105.032287	98.767996	101.30072	106.76081
τ4	83.754317	84.451199	88.252086	82.016559	85.761654	88.689271	80.461126	84.936144	89.73983
τ5	69.761586	72.25238	75.741338	68.654436	72.384772	75.682638	68.45105	72.348216	76.648706
τ6	58.261307	62.074546	65.794322	57.661864	61.384253	64.845532	58.331391	61.650292	65.640628
τ7	49.389578	53.10844	56.823369	49.020399	52.7354	56.449981	49.393625	53.445854	57.170715
MPCFT1	0.138592	0.175514	0.191177	0.154672	0.196015	0.243501	0.151898	0.181276	0.1999356
MPCFT2	0.0796	0.083182	0.088154	0.072719	0.071419	0.070921	0.07624	0.10216	0.079197
MPCFT3	0.0564	0.058566	0.056707	0.055724	0.056992	0.055378	0.058964	0.074504	0.059704
MSCFT1	0.074595	0.08982	0.0753	0.072003	0.07353	0.071313	0.098075	0.091025	0.075148
MSCFT2	0.141179	0.149375	0.148916	0.131332	0.132733	0.131749	0.138547	0.118043	0.1422862
MSCFT3	0.164946	0.163922	0.170242	0.160636	0.0160955	0.156274	0.159139	0.146837	0.16484
MSCFT4	0.178344	0.177539	0.182841	0.172219	0.173483	0.171057	0.174642	0.163285	0.178756
PFT	0.105112	0.058721	0.067428	0.028595	0.046395	0.073567	0.116522	0.108052	0.10749
V1	0.948698	0.739364	0.619681	0.710568	0.837525	0.957017	1.061579	1.070222	1.111304
V2	0.407331	0.843456	1.130702	0.880641	1.235641	1.294508	0.956122	0.867883	1.07624
V3	2.141894	2.08827	2.084736	2.128391	2.095593	2.046617	2.341805	2.330406	2.093191
V4	2.086654	2.055641	2.052102	2.1007	2.108769	2.110646	1.646885	1.664113	1.75259
V5	2.050429	2.044001	2.040099	2.059154	2.066841	2.070702	1.710465	1.694029	1.770144
V6	2.043119	2.13295	2.132956	2.053663	2.062478	2.065832	1.635494	1.75788	1.817476
V7	2.217373	2.267906	2.277499	2.3177771	2.336343	2.347086	1.914658	1.978602	2.05877
SC	**2.324761**	**2.445942**	**2.545074**	**2.441732**	**2.576604**	**2.686755**	**2.177695**	**2.253899**	**2.384537**
SE	**5.116869**	**4.976237**	**4.847708**	**5.087867**	**4.945731**	**4.798505**	**5.173824**	**5.041547**	**4.898107**

TABLE B.5: RESULTS SHOWING THE EFFECT OF T_0 AND X_F ON SC, SE AND XP WHEN F=15.611 kg/s,T_F=64.7 deg C,T_L=52 deg C.

	FEED FLOW RATE (F=15.611 kg/s)			F=18.611 kg/s		
	STEAM TEMPERATURE (deg C)			STEAM TEMPERATURE (deg C)		
	130	140	150	130	140	150
V01	0.604835	0.883368	1.1779694	1.079204	1.250283	1.146288
V02	1.696618	1.562574	1.367104	1.386381	1.362691	1.566132
L1	3.715603	3.439512	3.273326	6.360112	5.832161	5.718592
L2	4.6643	4.178876	3.893007	7.07068	6.719977	6.675609
L3	5.071631	5.02233	5.023709	7.951321	7.955235	7.970117
L4	7.213524	7.110602	7.108445	10.079712	10.050106	10.016734
L5	9.300179	9.166242	9.160547	12.180412	12.158866	12.12738
L6	11.350608	11.210244	11.200646	14.239566	14.219247	14.198082
L7	13.393727	13.343194	13.333601	16.293229	16.279675	16.263914
Lp	3.610491	3.380791	3.208598	6.01142	5.613159	5.458246
T1,T2	110.133017	115.956376	119.650966	112.27238	116.55009	119.180569
T3	95.853298	98.479866	102.261302	94.466995	96.435735	101.665816
T4	81.275315	81.920358	85.720137	77.930545	82.176338	86.827934
T5	68.017523	70.474285	73.961766	66.676837	70.210369	74.445784
T6	56.91083	60.703062	64.421377	56.961684	59.916446	63.879253
T7	48.282	51.996	55.71	48.282	51.996	55.71
X1	0.495777	0.535573	0.562764	0.355292	0.376549	0.385027
X2	0.394938	0.440815	0.473184	0.310592	0.326801	0.3289734
X3	0.363218	0.366784	0.366683	0.276193	0.276057	0.275542
X4	0.255369	0.259065	0.259144	0.217873	0.2185149	0.219243
X5	0.198073	0.200967	0.201092	0.180297	0.180617	0.181086
X6	0.162292	0.164324	0.164465	0.154225	0.154445	0.1546257
X7	0.137535	0.138056	0.138155	0.1347786	0.134898	0.1350288
Xp	0.510207	0.544872	0.574113	0.365321	0.391241	0.402345
τ1	119.576329	123.346293	128.93162	119.248093	123.1001	125.316291

τ2	114.4060553	118.697739	122.100178	115.734337	117.20389	120.792202
τ3	99.065312	102.756968	106.536561	98.409393	102.18853	105.032287
τ4	83.754317	84.451199	88.252086	82.016559	85.761654	88.689271
τ5	69.761586	72.25238	75.741338	68.654436	72.384772	75.682638
τ6	58.261307	62.074546	65.794322	57.661864	61.384253	64.845532
τ7	49.389578	53.10844	56.823369	49.020399	52.7354	56.449981
MPCFT1	0.138592	0.175514	0.191177	0.191199	0.209842	0.221426
MPCFT2	0.0796	0.083182	0.088154	0.086924	0.091505	0.085544
MPCFT3	0.0564	0.058566	0.056707	0.07553	0.081652	0.058703
MSCFT1	0.074595	0.08982	0.0753	0.129778	0.14297	0.117012
MSCFT2	0.141179	0.149375	0.148916	0.137502	0.156892	0.162304
MSCFT3	0.164946	0.163922	0.170242	0.163898	0.177955	0.216836
MSCFT4	0.178344	0.177539	0.182841	0.069461	0.076617	0.070505
PFT	0.105112	0.058721	0.067428	0.348692	0.220802	0.260346
V1	0.948698	0.739364	0.619681	0.710568	0.887817	0.957017
V2	0.407331	0.843456	1.130702	0.880641	1.235261	1.294508
V3	2.141894	2.08827	2.084736	2.128391	2.094868	2.046617
V4	2.086654	2.055641	2.052102	2.10071	2.1087596	2.110646
V5	2.050429	2.044001	2.040099	2.059154	2.060381	2.070702
V6	2.043119	2.13295	2.132956	2.053663	2.060428	2.065832
V7	2.217373	2.267906	2.277499	2.317771	2.331325	2.347086
SC	**2.324761**	**2.445942**	**2.545074**	**2.465585**	**2.612974**	**2.71242**
SE	**5.116869**	**4.976237**	**4.847708**	**4.968719**	**4.853387**	**4.753101**

TABLE B.6: RESULTS SHOWING THE EFFECT OF T_0 AND F ON SC, SE AND XP WHEN X_F=0.118, T_F=64.7 deg C, T_L=52 deg C.

	FEED SEQUENCE (S1)		FEED SEQUENCE S2		FEED SEQUENCE S3		FEED SEQUENCE S4		FEED SEQUENCE S5	
	without Rh	with Rh	without Rh	with Rh	without Rh	with Rh	without Rh	with Rh	without Rh	with Rh
V01	0.883368	1.286917	1.47458	1.55154	1.507622	1.4604	1.692232	1.545136	1.36802	1.293662
V02	1.562574	1.012611	1.146812	1.016429	1.154492	1.159726	1.069544	1.087868	1.532513	1.519222
L1	3.439512	3.392021	3.331678	3.379953	3.441386	3.393483	3.487586	3.569659	3.423827	3.696275
L2	4.178876	4.076895	4.034382	4.18003	4.007594	4.03068	4.213152	4.525923	4.074595	5.136863
L3	5.02233	4.884868	4.959591	4.988072	4.985773	5.054261	5.078242	5.36899	14.538649	14.087791
L4	7.110602	7.017596	6.988301	7.120501	6.679847	7.233439	14.228187	14.315413	12.975988	12.313078
L5	9.166242	9.170381	9.027683	9.266946	14.182788	13.90309	12.453976	12.639431	10.665553	10.3143
L6	11.210244	11.29478	13.414993	13.653348	12.341716	11.78573	9.858591	10.162902	8.011336	8.118798
L7	13.343194	13.413253	10.935509	11.210379	9.696977	9.292504	6.881937	7.308801	4.999979	5.774925
Lp	3.380791	3.325561	3.284428	3.346039	3.354313	3.311774	3.415714	3.482852	3.408793	3.597314
T1,T2	115.956376	116.406553	113.998404	112.64524	114.028569	115.3282	114.122272	115.88329	110.29661	110.76711
T3	98.479866	99.88523	97.32994	95.56805	96.933794	98.22076	96.406287	95.979984	96.006253	93.773191
T4	81.920358	83.529732	82.343557	80.842179	83.884705	82.05834	83.508128	83.015151	88.067061	83.278191
T5	70.474285	70.475537	70.163054	68.984519	74.848484	70.98799	74.628636	74.597802	77.451105	72.891513
T6	60.703062	60.509533	61.566358	60.718379	63.051401	61.54606	63.064427	63.447363	65.680759	62.362375
T7	51.996	51.996	51.996	51.996	51.996	51.996	51.996	51.996	51.996	51.996
X1	0.535573	0.543068	0.552904	0.545007	0.535278	0.542834	0.528187	0.516043	0.538023	0.498365
X2	0.440815	0.451839	0.4566	0.44069	0.459652	0.456409	0.437226	0.417011	0.452093	0.358604
X3	0.366784	0.377103	0.371421	0.369301	0.369471	0.364464	0.362743	0.3431	0.126704	0.130758

X4	0.259065	0.262497	0.263597	0.258703	0.275769	0.254664	0.129468	0.128679	0.141962	0.149605
X5	0.200967	0.200875	0.20405	0.198782	0.129883	0.132494	0.147912	0.145742	0.172715	0.178597
X6	0.164324	0.163093	0.137316	0.134919	0.149258	0.156299	0.186852	0.181257	0.229936	0.276893
X7	0.138056	0.137334	0.168451	0.164321	0.189966	0.198235	0.267671	0.252038	0.368435	0.318982
Xp	0.544872	0.553921	0.560858	0.550531	0.549173	0.556227	0.539301	0.528905	0.540396	0.512076
τ1	123.346293	124.524274	126.284489	125.15535	126.289949	127.9032	126.696542	127.01188	122.170336	121.91682
τ2	118.697739	119.377851	119.079812	118.75182	120.176855	121.4055	119.787685	119.92934	116.279946	114.89562
τ3	102.756968	104.35353	101.692451	99.912323	101.260281	102.4555	100.609663	99.834063	97.015121	94.818473
τ4	84.451199	86.109181	84.93869	83.39536	84.922068	84.52752	84.541753	84.041682	89.216306	84.501186
τ5	72.25238	72.252545	71.977767	70.758813	76.068079	72.04905	75.835101	75.783236	78.911046	74.415108
τ6	62.074546	61.868273	62.671896	61.809365	64.701891	62.83553	64.679656	65.000197	67.817632	64.460007
τ7	53.10844	53.101703	53.410648	53.373728	54.767795	53.74196	54.649615	54.428753	56.3030417	55.441951
MPCFT1	0.175514	0.207578	0.189167	0.199092	0.215335	0.207535	0.221426	0.216777	0.236483	0.226232
PCFT2	0.083182	0.066555	0.08393	0.070349	0.095712	0.067161	0.085544	0.057958	0.039848	0.047444
PCFT3	0.058566	0.049748	0.064469	0.053439	0.059442	0.048067	0.058703	0.036672	0.051801	0.04989
PCFT4			0.045131	0.035444	0.035661	0.044395	0.047802	0.047147	0.055598	0.032132
SCFT1	0.08982	0.06748	0.071652	0.072735	0.093982	0.074716	0.089567	0.09759	0.052947	0.064436
SCFT2	0.149375	0.142001	0.146315	0.142591	0.114229	0.146101	0.117012	0.116231	0.480726	0.158392
SCFT3	0.163922	0.165791	0.154945	0.162588	0.142506	0.150372	0.162304	0.137334	0.098332	0.174251
SCFT4	0.177539	0.166135	0.137224	0.15708	0.205606	0.155504	0.216836	0.159392	0.157936	0.189538
PFT	0.058721	0.06646	0.077686	0.075176	0.06617	0.07805	0.070505	0.0605638	0.040157	0.080305
V1	0.739364	0.684874	0.702704	0.800077	0.566208	0.637197	0.725566	0.956264	0.650768	1.440588
V2	0.843456	0.807973	0.925209	0.808042	0.978179	1.018193	0.865091	0.843068	0.925195	0.638062
V3	2.08827	2.132728	2.02871	2.132429	1.694074	2.179178	1.803695	1.939811	1.072351	1.523209

V4	2.055641	2.15278		445	1.42821		13	1.295587	1.562661	1.774713
V5	2.044001	2.124399	1.907825	1.943433	1.841072	1.707709	1.774211	1.675981	2.310435	1.998778
V6	2.13295	2.118473	2.19007	1.957652	2.644739	2.117561	2.595384	2.476529	2.654216	2.195502
V7	2.267906	2.197747	2.479485	2.442969	3.01713	2.493226	2.976654	2.854101	3.011546	2.343873
SC	**2.445942**	**2.299528**	**2.485262**	**2.369621**	**2.503124**	**2.464964**	**2.579367**	**2.483169**	**2.781237**	**2.637459**
SE	**4.976237**	**5.313691**	**4.938467**	**5.161636**	**4.86177**	**4.954282**	**4.70015**	**4.849182**	**4.396363**	**4.547948**
Mrh1		0.088267		0.067469		0.06765		0.083107		0.440253
Mrh2		0.085753		0.090633		0.091458		0.280171		
Mrh3		0.09278		0.09336		0.237945				
Mrh4		0.088005		0.169088						
Target Temp(rh1)		112.312966		106.28		108.89		107.86		82.72
Target Temp(rh2)		93.827272		[illegible]		91.375		75.2		
Target Temp(rh3)		78.660585				77.0495				
Target temp(rh4)		66.544798								

TABLE B.7: RESULTS SHOWING THE EFFECT OF SC AND SE WITH AND WITHOUT REHEATERS FLOW SEQUENCES (S1, S2, S3, S4, S5)