LOAD FLOW STUDIES OF HVDC SYSTEM

A DISSERTATION

submitted in partial fulfilment of the
requirements for the award of the Degree
of
MASTER OF ENGINEERING
in
ELECTRICAL ENGINEERING
(POWER APPARATUS & ELECTRIC DRIVES)

By
A. K. SRAVAT

DEPARTMENT OF ELECTRICAL ENGINEERING
UNIVERSITY OF ROORKEE
ROORKEE-247667 (INDIA)
March, 1989

DEDICATED
TO
MY TEACHERS

CANDIDATE'S DECLARATION

I hereby certify that the work which is being presented in this dissertation entitled **"LOAD FLOW STUDIES OF HVDC SYSTEM"** in partial fulfilment of the requirements for the award of the degree of **MASTER OF ENGINEERING** with specialization in **POWER APPARATUS AND ELECTRIC DRIVES**, submitted in the Electrical Engineering Department, Universtiy of Roorkee, ROORKEE (INDIA), is an authentic record of my own work carried out for a period of about Five and Half months from 22nd Sept. 1988 to 31th March 1989, under the supervision of Dr. M.P. DAVE, Professor, Electrical Engineering Department, University of Rorrkee, ROORKEE.

The matter embodied in this dissertation has not been submitted by me for the award of any other degree.

DATED : 5.4.'89

(A.K. SRAVAT)

This is to certify that the above statement made by the candidate is correct to the best of my knowledge.

M P Dave

(Dr. M.P. DAVE) 5/4/89
Professor
Electrical Engineering Department
University of Roorkee
Roorkee - 247 667.

ACKNOWLEDGEMENT

I wish to express my profound gratitude to my guide, Dr. M.P. DAVE, Professor, Electrical Engineering Department, University of Roorkee, ROORKEE. without whose able guidance and inspiration, it would not have been possible to complete this work.

I would also like to extend my sincere thanks to Dr. D. R. Kohli, Professor, Electrical Engineering Department, University of Roorkee, ROORKEE. Prof. Ravish Chandra, Chairman PGAPC, Electrical Engineering Department, University of Roorkee, ROORKEE, Dr. R.B. Saxena, Prof & Head, Electrical Engineering Department, University of Roorkee, ROORKEE, Dr. Vinod Kumar, Reader, Electrical Engineering Department, University of Roorkee, ROORKEE, and Mr. Vinay Pant, Lecturer, Electrical Engineering Department, University of Roorkee, ROORKEE, and other staff member for their timly help and creative suggestions to overcome lot of problems during this work.

Timely help and valuable suggestions given by Mr. Mata Parsad, Executive Director (PS) NTPC. Mr. S. Chander, Manager, NTPC. Mr. G.S. Dhanjal, Manager (HVDC), NTPC. and Mr. Robti Das, Sr. Engineer, NTPC and others are gratefully acknowledged.

I am also greatful to NTPC for allowing me to compelete this work and imparting the necessary information.

The completion of thesis with all the help available would not have been possible without the co-operation and advice of all my close friends, Mr.N.Verma and faimly. They all deserve a special word of thanks from me.

Thanks are also due to the Computer Lab staff,CAD-Center staff who played an important role in the completion of this work.

In the last, I am greatful to all whose name, I have missed and played a role in seeing through this work to final stage.

(A.K. SRAVAT)

ABSTRACT

HVDC transmission has gained a wide spread acceptance internationally for bulk power transmission. This is also an acceptable mode to interconnect two large AC systems having differnt frequencies as has happend in Japan.

Load flow studies of such integrated HVDC and Ac system becomes a very important aspect for system design. The work in this area has started as early in sixties and newer approaches were further developed.

In the present work a load flow program has been developed for such integrated HVDC/AC system. The program was written in FORTRAN-77, developed around IBM PC-AT. The developed program has been validated on 14 bus AEP system and used to predict the performance of the integrated HVDC/AC system of NTPC of India. The results are on expected lines.

The organisation of the thesis includes a review work in Chapter II, the algorithm details in Chapter III, flow chart in Chapter IV. The conclusions have been drawn in Chapter V together with the scope of the future work.

LIST OF PRINCIPAL SYMBOLS USED

P = Active power

Q = Reactive power

G = Conductance

B = Susceptance

Y_{Bus} = Admittance matrix

Z_{Bus} = Impedance matrix

$G_{pq} - jB_{pq}$ = $(pq)^{th}$ element of Y_{Bus} formed

$P_p - jQ_p$ = Complex power at bus P

ΔP = Active Power mismatch

ΔQ = Reactive Power mismatch

$V\angle\theta$ = Bus voltage (phase angle referred to slack bus)

$V\angle\mu$ = Converter bus Voltage (Phase angle referred to converter current)

Vd = DC Voltage

$E\angle\phi$ = Converter terminal AC Voltage

I = Alternating Current (r.m.s)

Id = Direct current

A = Transfomer Ratio

X = Reactance

α = Delay Angle

δ = Extinction Angle

R_{dc} = DC Line resistance

R = DC link residuals

x = DC link variables

X_m = Communication reactance at the rectifier end (m)

X_n = Communication reactance at the inverter end (n)

P_{DC} = DC Power

CONTENTS

CHAPTER I

CHAPTER 1

INTRODUCTION:

The size of power system has grown steadily and the problem of power system become more complex and challenging. Incorporation of HVDC transmission subsystem in AC system network has been a major change in power transmission during last two decades. To determine the performance of a perticular system various studies are being carried out by a power utility. They are :

1. Load flow studies
2. Short ckt studies
3. Transient and dyanmic stability studies

Load flow studies are carried out in system planning, operational planning and operation and control. This also becomes a constituent of the studies for optimisation and stability. The load flows studies provide power flows and voltages for a specified network depending upon the various system constraints. This also specifies the net interchange between the individual operating systems. This is essential to analyse the current performance of a power system and to analyze the efficacy of various alternative plan for system expension to meet the increased demands.

Load flow analysis deals not only with the actual physical mechanism which control the power flow in the network but also how to select a best or optimum flow configration from among galaxy of possiblities.

Before the advent of digital computers the load flow studies were carried out by the network analysers and transient studies by AC network analysers. The first digital computer oriented load flow method was proposed in 1956. After that the impact of digital computers on above studies had been very strong and replaced the network analysers completely in the sixtees.

HVDC has become a economically viable alternative for bulk power transmission and asynchromous ties. Following claims are made in favour of DC transmission:

1. DC transmission results in lower losses and cost than equivalent AC lines.
2. Transmission via cables over relatively long distances is possible by DC and is very difficult with AC because of the charging current.
3. The control in DC scheme is very fast and being used to improve the AC system stability.
4. The DC stations with or without transmission distance can be justified for interconnections of AC systems of different frequency or different control philosophies.

The first commercial HVDC link was established between Sweden and Gotland in 1954. After that numereous projects came into existence. In the begining two terminal links were installed but nowadays a number of multiterminal links are being installed. The biggest multiterminal HVDC sub system is going to be installed at ITAPAU in Brazil. India has also adopted first HVDC line connecting two AC system

(Rihand-Delhi bipolar HVDC line) and back to back system (Singrauli vindiyachal Back to Back). A typical HVDC link is shown in the Fig.(1.1).

In the wake of this interest on the integration of dc transmission network into existing a.c power systems, there is need for versatile d.c load flow technique that will be applicable to steady state and stability studies.

Firstly, there is a real need for a load flow technique that not only handles all kinds of pratical converter controls but also be capable of representing the combined behaviour of converter controls during steady state and transient conditions. DC systems are equipped with controls to regualte power current or control angle. During steady state or slow transients conditions, the converter control is supplemented by the tap changer on the converter transformer, keeping the control angle within a small range close to min. value. Under transient conditions, the tap changer will not respond quickly but control angle of a converter can vary with little delay.

Secondly, a significant improvement in the computing time for DC solution will be worthwhile even though for existing integrated systems consisting of one DC link, the time for solution of much larger network is the prdominating measure[11]. Nevertheless, at a rate of 11 to 13 variables per additional bipolar terminal, the order of the DC problem

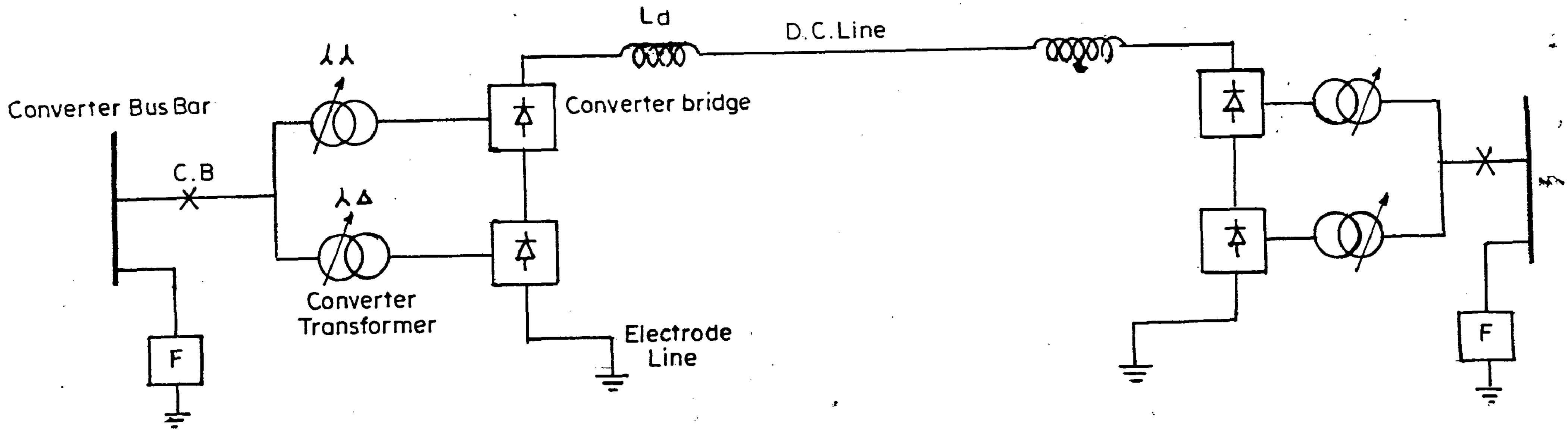

A D.C. TRANSMISSION LINK WITH TWELVE PULSE CONVERTER CONFIGURATION.

FIG NO.(1.1)

will increase rapidly. With most computational methods the computing time will increase by some exponential function of that order. The storage requirement of a DC load flow technique using Newton's method of solution is not small because of the large no. of variables involved. However a substaintial reduction of storage requirement of the Newton's method of solution can be achived by sparsity techniques or by Fast Decoupled Method.

1.2 A number of methods have been proposed over the years for load flow studies of AC/DC system. The first method was proposed by Barker & Carre in 1962. These methods basically differ in system representation and approach to solve them. The two most commonly used present day approaches are :

(i) Simultaneous Solution Method [11] : In this approach, the AC/DC system equations are combined togther and then resultant single set can solved at each iteration with in the load flow program.

(ii) Sequential Solution Method [12] : DC system load flow solution can be formulated seperately so that the terminal conditions can be imposed on the relevent buses in any AC load flow program. The convergence involves alternate cycle iteration between the DC and AC solution.

The merit of the first method is that an overall and sophisticated Newton program can be devloped with the promise of good computing efficiency. Contrary to this point of view in the second method there is the need to replace or restructure any existing AC program that may be providing satisfactory performance. Also as load flow technique develop in future, a new AC load flow program can continue to use the seprate DC solution subprogram.

H. Sato & J. Arrilaga [4] developed the load flow technique which improve the accuracy and convergence rate of standred AC program when system contain HVDC link. An improved simulation of DC system has been described and program uses the DC routine in conjuction with several standred AC load flow methods.

Prof. J.Arrilaga & P. Bodger[11] have proposed a method for load flow of integrated system which is based on Fast Decoupled load flow method. The DC and AC system equations are formulated and solved simultaneously. It is shown that versatility of decoupled programs increased and it is further shown that their reliability and computational efficiency are maintained.

J. Reeve & G. Fahmy [12] developed a generalised Newton AC/DC load flow program which is based on sequential approach. It can be readily interfaced with any AC load flow programme.

R.M. Mathur & M.M. El-Marsafamy [14] proposed a new technique for the load flow calculations of integrated AC/DC system. The technique is fast, versatile efficient and reliable and therefore an improvement over known procedure.

The procedure uses Fast Decoupled load flow method, handles all AC/DC system equations simultaneously and fully exploits the sparisity technique and it does not involve inversion of system matrix at each iteration (as was in the case with Arrilaga [11]).

C.M.Ong [15], described a method for solving the load flow problem of a general multi terminal DC network in an integrated system and in this method memory requirmenent has been considerably reduced.

In the beginning the Newton-Raphson Method was being widely used for integrated system, nowadays Fast Decoupled load flow method is gaining more popularity on account of its simplicity, speed and low memory requirment. The fast decoupled method is developed by introducing a few approximation into NR method.[7] Although generally it is very efficient yet suffers the disadvantage of poor convergence chatacteristic for system having large R/X ratio.

To save the time and reduce memory requirment sparsity technique has been used. Prior to this dikoptics approach was used. The sparsity technique is more helpful for large systems.

In the present work, a method has been developed for load flow solution of integrated AC/DC system having Bipolar HVDC link. This essentially employs Fast Decoupled Method with the simulation of DC system. The AC/DC equations have been solved simultaneously i.e. simultaneous solution approach has been used. The developed program tests have been carried out on AEP-14 bus system and NTPC system which contain HVDC Rihand-Dadri HVDC link. The thesis has been arranged as follows.

In Chapter II, HVDC load flow methods have been reviewed.In Chapter III details of the Decoupled Method has been described alongwith problems formulation. Description of algorithm, flow chart and computer programming have been given in Chapter IV. The data, the test results and conclusions have been given in Chap V.

---- O ----

CHAPTER II

CHAPTER 11

LOAD FLOW METHODS OF INTEGRATED AC-DC SYSTEMS

The most important problem in load flow field is to choose the best method for a given application. The solution is difficult because the relative properties and performance of diffrent load flow methods get influenced substantially by types and size of the problem to be solved by the computing facilities available and by precise details of implementation. Any final choice is almost invariably a compromise between various criteria of goodness by which load flow methods are to be compared with each other.

The table (on page10) gives a brief summery of some of the main types of load flow solution currently in applications and the requirements imposed on the numrical processes.

The load flow problem consist of two subproblems which are as follows.

(i) The formulation of mathematical description of the problem .

(ii) The application of a most suited numerical method for solution.

2.1 MATHEMATICAL FORMULATION

The mathematical repersentation of the load flow problem results in a set of nonlinear algebric equation. These equation can be formulated by using either bus or loop frame of reference. The loop admittence matrix was used in

TABLE

Load flow calculations -Types and Requirement

TYPES OF SOLUTION	
Accurate, Approximate	By increasing the tolarance of convergence in general more accurate solution is obtained.
Unadjusted, Adjusted	By engineering experience, we can start the solution with value closer to the final solution.
Off line, On line	On line solutions are obtained for reduced model and in off line solution more details can be taken into account.

Properties required of load flow solution method	
High speed	especially for - Large system, real time application multiple cases, interactive application
Low storage	especially for - Large system, computer with small core availability.
Reliability	especially for - Ill conditioned system, outage studies, real time application.
Versatilty	Ability to handle conventional and special features (adjustments, repersentation of power system apparatus, suitability for incorporation into more complicated system.)
Simplicity	Ease(and cost) of coding , maintaining and enhancing the algorithm and computer program based on it preparation required to specify the network loops.

earlier approaches but did not have wide-spread application because of tedious data preparetion.

The coefficients of equations depends on the selection of independent variables, voltage or current. Thus either the impendence or admittence network matrix can be used.

The Y-matrix iterative methods were well suited to early generation of computers since they require mimimal computer storage. Furthermore the bus admittence matrix could be formed easily and modified for network changes in subsequent cases. Although this approach performs satisfactorily on many problems, they converge slowly. This deficiency has been overcome by Z-matrix methods which converge more reliably but sacrifice some of the advantages of Y matrix iterative methods, notably storage and speed when applied to lerge systems.

The Y-bus matrix repersentation had been popular than any other method with regard to storage and speed using sparsity techniques. A balanced three phase network is assumed so that the transmission network is represented by its positive sequence network. The elements of the network are therefore not mutually coupled and hence the nodel Y-Bus can be written/formed by inspection easily.

2.1.1 SYSTEM COMPONENT MODELLING:

The commenly used component that need modelling for HVDC/AC load flow are:

(i) Transmission line.

(ii) Tap changing Transformer.

(iii) Converter/Inverter.

(A) TRANSMISSION LINE REPERSENTATION:

A transmission line can be repersented by its equivalent π/T network. Often nominal/equivalent π is perferred in the representation since charging effect is easily accounted without changing the Bus structure. An equivalent π network for a transmission line is given in fig. (2.1). The equivalent π parameter of the line are as follows :

$$Z\pi = zl \frac{\text{SINH}\ (\tau l)}{\tau l} \approx zl \text{ (for medium line)}$$

$$Y\pi = (yl/2) \frac{\text{TANH}\ (\tau l/2)}{(\tau l/2)} \approx yl/2 \text{ (for medium line)}$$

Where τ = Propgation constant = $\sqrt{(zy)}$

l = Length of line

z = Series impedence per phase per unit length

y = Shunt admittence per phase per unit length

(B) REPERSENTATION OF TRANSFORMER WITH TAP CHANGER :

A transformer with off nominal turns ratio can be represented by its impedence or admittence connected in series with an ideal transformer. An equivalent π circuit then can be treated in the same manner as the line elements.

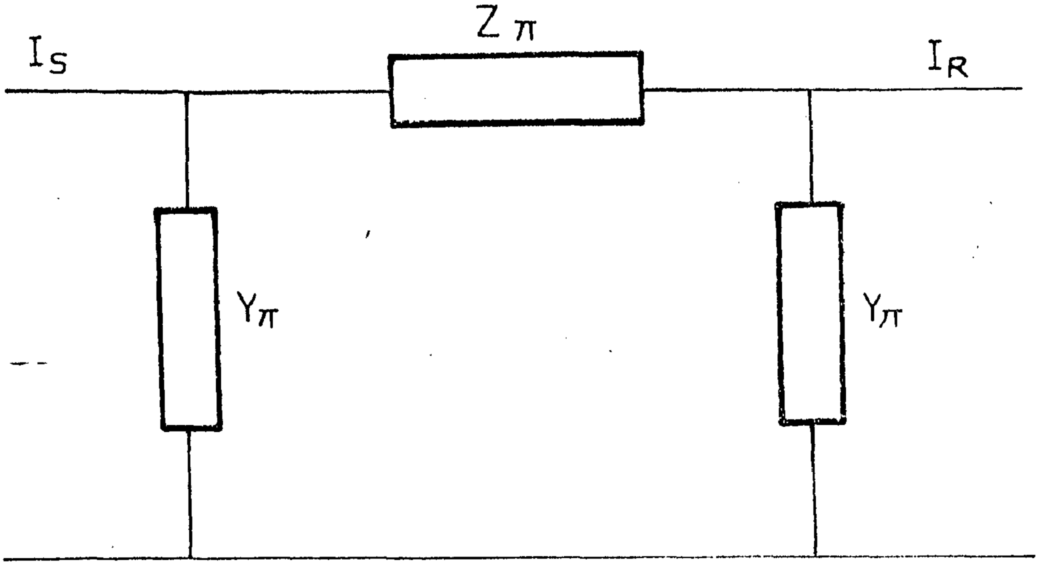

FIG. 2·1 π - EQUIVALENT OF TRANSMISSION LINE

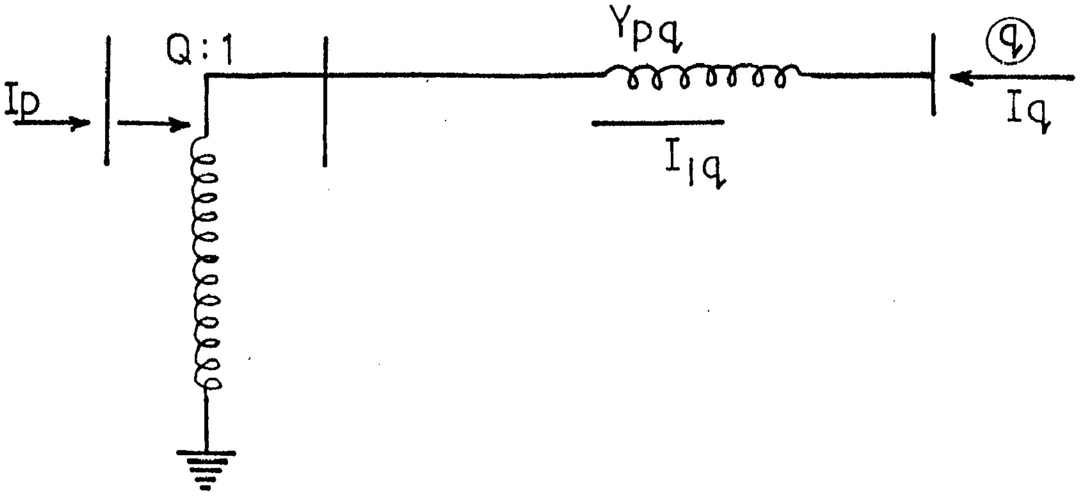

EQUIVALENT CIRCUIT

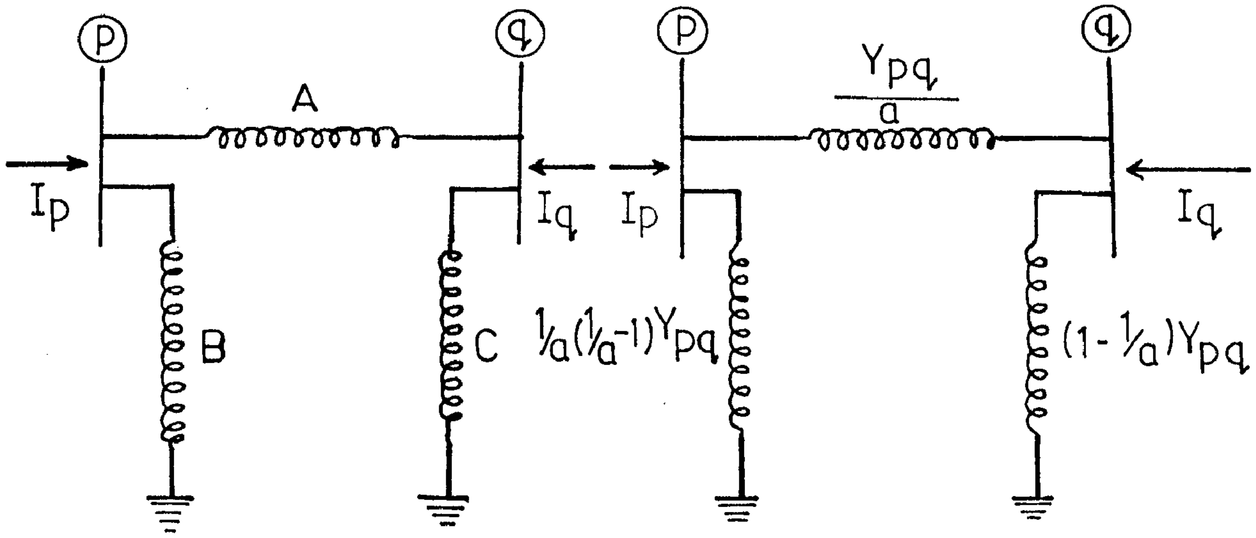

EQUIVALENT π CIRCUIT

EQUIVALENT π CIRCUIT WITH PARAMETERS EXPRESSED IN TERMS OF ADMITTANCE AND OFF NOMINAL TURNS RATIO

FIG. 2·2

The equivalent π circuit for transformer is shown in fig. (2.2).

When off nominal turns ratio is represented at bus P for a transformer connecting bus P and Q, the Self admittence at bus P can be given by

$$Ypp = yp1 + \ldots + ypq/a + \ldots + ypn + (1/a)((1/a)-1)\ ypq$$

or

$$Ypp = yp1 + yp2 + \ldots\ldots + (ypq/a^2) + \ldots\ldots + ypn \qquad \ldots (2.1)$$

The mutual admittence from bus P to bus Q can be given by,

$$Ypq = -ypq/a \qquad \ldots (2.2)$$

The Self admittence at bus Q is

$$Yqq = yq1 + \ldots\ldots + ypq/a + \ldots\ldots + yqn + (1-1/a)ypq$$

or

$$Yqq = yq1 + \ldots\ldots + yqp + \ldots\ldots + yqn \qquad \ldots (2.3)$$

and is unchanged . The mutual admittence from bus Q to bus P is

$$Yqp = -yqp/a \qquad \ldots (2.4)$$

(C) CONVERTER / INVERTER REPERSENTATION :

The converter/inverter can be repersented in the following manner. Refer to fig. (2.3).

The equations for voltage and current on AC and DC sides of the converter are

$$Vdm = K1\ Em\ \cos \phi m \qquad \ldots (2.5)$$

$$Im = K1\ Id \qquad \ldots (2.6)$$

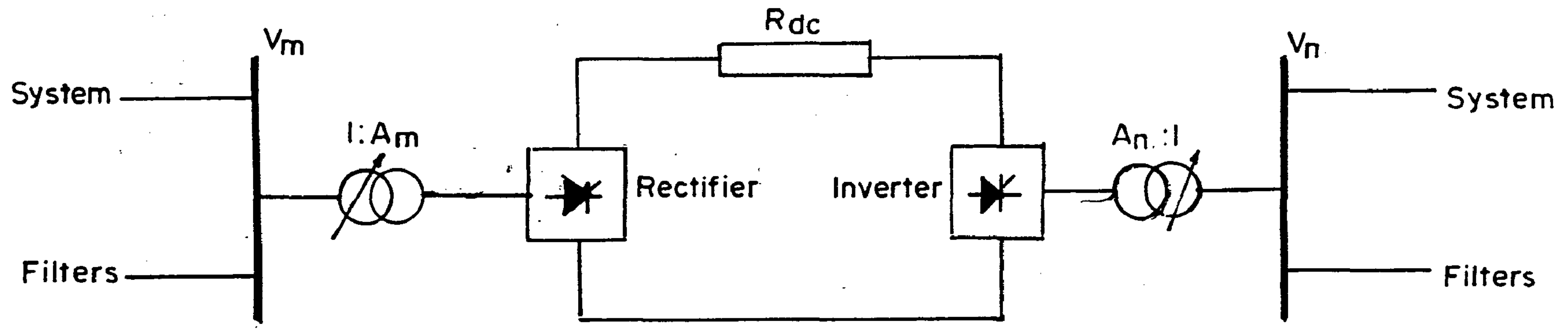

Schematic

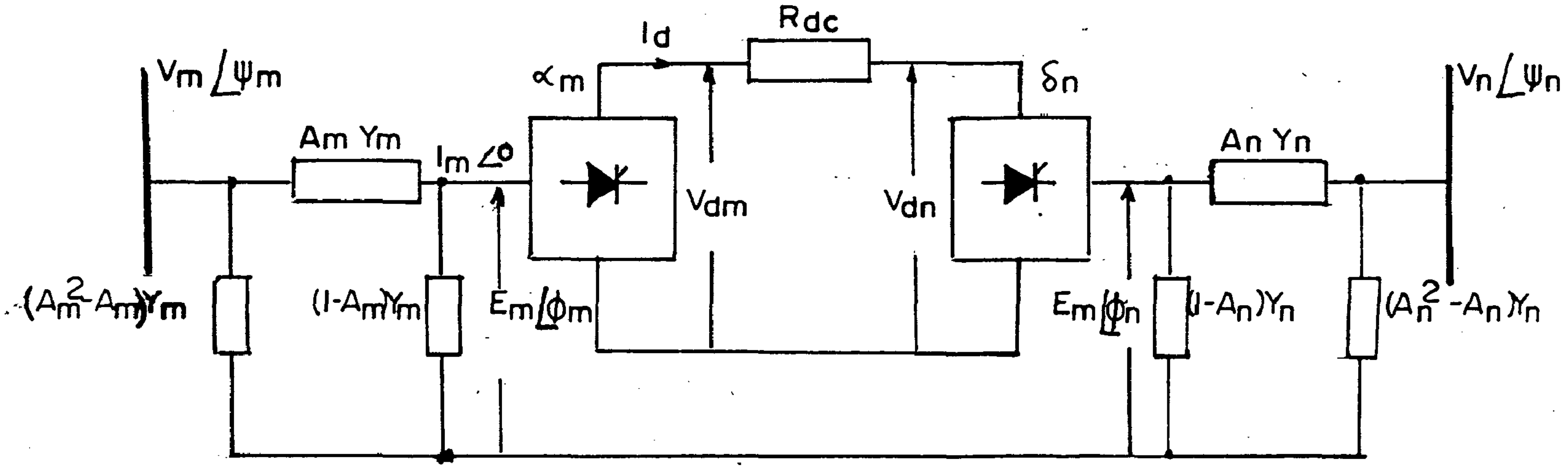

Equivalent circuit

BASIC MODEL OF D.C. LINK INTERCONNECTING BUS BARS (m) & (n).

FIG NO. (2.3)

$$K1\ Id = Bm\ Em\ \mathrm{SIN}\ \phi m - Bm\ Am\ Vm\ \mathrm{SIN}\ \psi m \qquad \ldots (2.7)$$

$$Em\ \mathrm{COS}\ \phi m = Am\ Vm\ \mathrm{COS}\ \psi m$$

$$Vdm = K1\ Am\ Vm\ \mathrm{COS}\ \psi m$$

Similar equations apply at inverter end (with - sign in equ. 2.7)

In terms of DC current and voltage the following equations can be written.

$$Vdm = K1\ Em\ \mathrm{COS}\ \alpha m - K2\ Xm\ Id \qquad \ldots (2.8)$$

$$Vdn = K1\ En\ \mathrm{COS}\ \delta n - K2\ Xn\ Id \qquad \ldots (2.9)$$

$$Vdm - Vdn = Rdc\ Id \qquad \ldots (2.10)$$

The equations contains 13 variables. The DC Jacobian equations for the DC system is

$$R = A . \Delta X \qquad \ldots (2.11)$$

Where R are the residuals for the nonlinear equations repersenting DC link power flow and control strategies and can be given as follows :

$$R1 = Vdm - K1\ Em\ \mathrm{COS}\ \phi m$$

$$R2 = Vdn - K1\ En\ \mathrm{COS}\ \phi n$$

$$R3 = K1\ Id - Bm\ (Em\ \mathrm{SIN}\ \phi m - Am\ Vm\ \mathrm{SIN}\ \psi m)$$

$$R4 = K1\ Id + Bn\ (En\ \mathrm{SIN}\ \phi n - An\ Vn\ \mathrm{SIN}\ \psi n)$$

$$R5 = Vdm - K1\ Em\ \mathrm{COS}\ \alpha m + K2\ Xm\ Id$$

$$R6 = Vdn - K1\ EN\ \mathrm{COS}\ \alpha n + K2\ Xn\ Id$$

$$R7 = Vdm - K1\ Am\ Vm\ \mathrm{COS}\ \psi m$$

$$R8 = Vdn - K1\ An\ Vn\ \mathrm{COS}\ \psi n$$

$$R9 = Vdm - Vdn - Rdc\ Id$$

$R10 = Vdm\ Id - Pdm^{sp}$

$R11 = COS^{sp}\alpha m - COS\ \alpha m$

$R12 = COS^{sp}\delta n - COS\ \delta n$

$R13 = Vdn^{sp} - Vdn$

The first nine equations are obationed from system equations and last four equations are control equations

A is the matrix of first order diffrentials ($\frac{\partial R_K}{\partial x_i}$) for K, i = 1, ... N.

$\triangle$ Xi correction vector for DC link variables.

2.1.2 BASIC LOAD FLOW EQUATIONS AND BUS TYPES:

The equations describing the performance of the network of a power system usuing bus frame of reference in admittence form are

$\bar{I}$ bus = Y bus $\bar{E}$ bus

The bus loading equations are

$$Pp - jQp = Ep^* \ Ip \qquad \ldots (2.11)$$

And the current can be given by

$$Ip = (Pp - jQp)/Ep^* \qquad \ldots (2.12)$$

Where Ip is positive when flowing into the system .If the shunt elements are not included in the parameter matrix, the total current at bus P is

$$Ip = (Pp - jQp)/Ep^* - yp\ Ep$$

Where yp Ep is the shunt current flowing from bus P to ground.

The buses are catagorised into three catagories depending upon which of the four variables P,Q,V and δ are specified.

(i) PQ BUS: is one at which total injected power is specified.

$$Sp = Pp - jQp$$

$$= (Pgp - Plp) - j(Qgp - Qlp) = Ep^* Ip$$

They are usually load buses.

(ii) PV BUS: is one at which total injected active power is specified and voltage is maintained at specified value by reactive power injection.

$$Pp = Pgp - Plp = RE\ (Ep^* Ip),\ Vp = |Ep|$$

In case sufficient reactive power injection is not available, it may be required to be converted to a PQ bus. They are usually generator buses or buses supported by reactive power supply.

(iii) SLACK BUS : (OR SWING BUS) at which active and reactive power is not specified but voltage is specified both in magnitude and phase angle. This serves to take into account system losses which are not *a priori* known.

2.1.3. BUS MISMATCH AND SOLUTION ACCURACY :

The power mismatch at PQ or PV bus can be given by

$$\triangle\ Pp = Pp^{sp} - Pp^{cal}$$

For each PQ bus

$$\triangle\ Qp = Qp^{sp} - Pp^{cal}$$

The most common convergence criteria used in practice is

$$\triangle\ Pp \leq Cp \text{ for all PV \& Pq buses}$$

$$\triangle\ Qp \leq Cq \text{ for all Pq buses}$$

The tolerance can be choosen typically in the range .01

2.1.4. ACCELERATION FACTOR :

The process can converge at a considerably faster rate by the application of acceleration factor α, the effect of which on iterative method is analogous to that of the loop gain in servomechanism. The difference term is multiplied by this factor

$$V^{k+1} = V^{k} + \alpha \,.\, V^{k+1}$$

$$\theta^{k+1} = \theta^{k} + \alpha \,.\, \theta^{k+1}$$

This so called acceleration factor α is an empirically determined number between 1 & 2. With a good choice of α the convergence can be speeded up by a factor of two in some cases and sometimes a divergent case can be made to converge.

2.1.5 LOAD FLOW EQUATIONS :

The load flow equation in A.C. system in polar co-ordinates are given by :

$$Ep = Ep\, e^{j\delta p}, \quad Eq = Eq\, e^{j\delta q}$$

$$Ypq = Ypq\, e^{-j\theta pq}$$

$$Pp - jQp = Ep^* \Sigma \ Eq\ Ypq$$

$$= \Sigma\ Ep\ Eq\ \ Ypq\ \ e^{-j(\theta pq+\delta p-\delta q)} \quad \ldots (2.13)$$

Since $e^{-j(\theta pq+\delta p-\delta q)} = Cos(\theta pq+\delta p-\delta q) - jSin(\theta pq+\delta p-\delta q)$

Therefore

$$Pp = \Sigma\ Ep\ Eq\ \ Ypq\ Cos(\theta pq+\delta p-\delta q) \quad \ldots (2.14)$$

$$Qp = \Sigma\ Ep\ Eq\ \ Ypq\ Sin(\theta pq+\delta p-\delta q) \quad \ldots (2.15)$$

LOAD FLOW SOLUTION :

The load flow solution for an N-bus system basically means to solve the 2N non-linear algebric equations. The solution gives us the state variables which determine the steady state of the system. Various load flow methods to solve the above equations are :

(i) Gauss-Seidal Method
(ii) Newton-Raphson Method
(iii) Decoupled or Fast Decoupled Method

The Gauss-Seidal Method is applied for small system and generally not in use. The most popular method is Newton-Raphson Method. The Fast Depcoupled Method has gained popularity over other methods because it is fast and require less storage.

For the integrated AC/DC system load flow, the DC system is modelled in terms of converter equations, control equations and their residuals. The residuals are equivalent to the power mismatch. The network equations are written separately and then interfaced with AC system. The general form of such incremental residual equations for HVDC terminal pair is :

$$[R] = [A]\,[\Delta X]$$

where R is the residual vector obtained by taking the difference of the basic equations of converter and its control. Or R = (L.H.S. - R.H.S.) of the equations. A is the Jacobian matrix and can be given by :

$A = \partial Ri / \partial Xi \quad i = 1,n$

ΔX = correction vector for the problem variables.

2.2.1 LOAD FLOW TECHNIQUES FOR INTEGRATED AC/HVDC SYSTEMS :

Enormous amount of work has been done to find out the solution for load flow problems of AC/DC systems. The two basic methods normally used are Sequential Method and Simultaneous Solution Method. In Sequential Method AC/DC load flow are carried out alternatively. AC load flow gives the AC voltage at the DC link terminals. In the Simultaneous Solution Method the AC/DC load flow is carried out simultaneously. The combined admittence matrix is formed and AC/DC equations are solved simultaneously.

The various approaches appeared in the literature are described briefly in the following.

2.2.2 J. Arrilaga & P. Bodger Approach : [11]

This approach is based on Simultaneous Solution Method. They developed a model of HVDC link suitable for incorporation in Fast Decoupled AC load flow program. The model is not restricted to a particular control mode and provision is made to alter the control equations according to pre-specified constraints for the variables. The equations for the DC link are :

$$Vdm = K1\ Em\ Cos\ \phi m$$

$$Im = K1\ Id$$

$$Vdm = K1\ Am\ Vm\ Cos\ \psi m$$

$$Vdm = K1\ Em\ \cos \alpha m - K2\ Xm\ Id$$

$$Vdn = K1\ En\ \cos \delta n - K2\ Xn\ Id$$

$$Vdm - Vdn = Rdc\ Id$$

The equation contain 13 variables and require four equations or control specifications for their solution. The DC Jacobian can be given by:

$$[R] = [A] \cdot [\Delta X]$$

Where R are the residuals representing the DC link power flow and control strategies and obtained by substracting the R.H.S. term from the L.H.S. term of the above equations. A are the first order differentials

$$A = \partial Rk / \partial Xi \quad \text{for } k, i = 1 \ldots\ldots n$$

and Δ X is the correction vector for variables. A detailed description of this method is given in Chapter III.

2.2.3 J. Reeve & B. Fahmy Approach : [12]

They developed a method suitable for multi terminal HVDC system. Any configuration of multi terminal HVDC system is accommodated in a generalised Newton DC load flow program. The sequential solution method has been used for the solution. The converters can be connected either in loop or parallel connection. With parallel connection either a teed (Radial) or meshed connection can be alternatively envisaged for each pair. The program has been designed to accept any configuration. The DC load flow has been developed seprately. The Newton Method Jaccobian matrix to be constructed and solved at each iteration of the DC system load flow calculation are :

$$F = -J \cdot \triangle X$$

F is the residual vector obtained by first taking derivative of control and system equations and then (L.H.S. - R.H.S.) term. e.g. At the converter

$$Vd = a\ V\ Cos\theta - Rc\ Id$$

then residual

$$Fv = -\triangle Vd + a\ V\ \triangle Cos\theta + V\ Cos\theta\ \triangle a - Rc\ \triangle Id$$

J is the Jacobian matrix and $\triangle X$ is the correction vactor for problem variables. The separation of DC load flow program from AC load flow permits separate development and the use of any AC program without sacrifice in computing speed and efficiency. The general principle adopted is to altenate to between AC and DC load flow solution. The overall convergence is based upon the AC and DC system mismatch (residuals) and change in interface quantities between succesive AC/DC iterations. A no. of iterations sequence can be adopted in this method and all cases converge reliably.

2.2.4 R.M. Mathur & M.M. El-marafawy Approach: [14]

They developed the new technique for the load flow calculations for the integrated AC/DC system. A new technique for formulating and solving the DC system is developed which is faster and require little storage. The fast decoupled load flow has been choosen as the base routine for the AC system. The DC system equations are integrated with the best known AC load flow. The DC system fromulation is generalised for multiterminal DC system configuration.

The bifactorisation and sparisity techniques have been fully exploited. Newton Mthod in the form $R = A \cdot \Delta X$ has been used

For AC system

$$\Delta P/V = [AJ1].\Delta\theta, \quad \Delta Q/V = [AJ4].\Delta\theta$$

Integrated AC/DC system yields

$$\begin{bmatrix} \Delta P/V \\ \Delta Q/V \\ R \end{bmatrix} = \begin{bmatrix} AJ1 & C & PX \\ D & AJ4 & QX \\ B & RV & A \end{bmatrix} \begin{bmatrix} \Delta\theta \\ \Delta V \\ \Delta X \end{bmatrix}$$

AJ1, AJ4, C, D have the same structure as in AC system (C=0, D=0). Submatrices PX, QX, B and RV are highly sparse and consist of mainly zero elements (B = 0) except those associated with AC/DC buses. By manipulating the above matrix we get :

$$\begin{bmatrix} \Delta P/V - PX\Delta X \\ \Delta Q/V - QX\Delta X \\ R - RV \quad V \end{bmatrix} = \begin{bmatrix} AJ1 & 0 & 0 \\ 0 & AJ4 & 0 \\ 0 & 0 & AINT \end{bmatrix} \begin{bmatrix} \Delta\theta \\ \Delta V \\ \Delta X \end{bmatrix}$$

In the above manipulation and for storage sparsity techniques are fully exploited. The method employ the simultaneous solution approach and the AC/DC equations are solved simultaneously. The step by step solution for DC system is faster and require less storage and used in this method. The proposed method is faster and efficient compared to any other known method.

2.2.5 C.M. Ong Approach :[15]

Presented a novel approach for solving the load flow problem of a general multi terminal DC network in an integrated AC/DC system. This method iterates directly on the DC voltage equations using a digital current reference balencer to update the DC currents. Since the digital current reference balencer has a simple closed form solution, the computational effort per iteration is extermly small. The sequential method for solution has been used.

In the DC load flow to initate the first voltage iteration, an estimate of the terminal voltage Vdi is required. A good estimate of the Vdi is to set them equal to their respective ceiling values. The current refrences of current controlling terminal are set to their respective scheduled values. The DC current of voltage controlling terminal is then determined by current references Idi used in all other stations. According to network conditions

The set of estimated current references Ii^{ref} for power controlling and voltage controlling terminals are put through a digital current refrence balencer. The CRB uses least square method to determine a balenced set of current references Idi for controlling terminals that minimise the error function.

$$\epsilon = 1/2 \Sigma \sigma i (Ii^{ref} - Idi)^2$$

Subject to the constraints given by network equations. The set $(i \in \Omega)$ denotes all non-current controlling terminals and σi are the weighting coefficients. The solution to least square problem with the equality constraint equation

$$\Sigma Idi = 0$$

is given by

$$Idi = Ii^{ref} - \lambda/\sigma i$$

Where $\lambda = (\Sigma 1/\sigma i)^{-1} \quad \Sigma Ij^{ref}$

For AC/DC load flow the sequential approach has been used. The algorithm has excellent convergence properties. The storage requirement is only few percent of that required in other techniques except [11] which manipulates the full Jacobian matrix.

The above all approaches in general either used sequential or simultaneous solution method. The difference lies in the versatility, efficiency and DC system formulation and the storage requirement for particualr method.

---- 0 ----

CHAPTER III

CHAPTER - III

INTEGRATED AC/DC LOAD FLOW :

The integrated AC/DC load flow method used in the present work is based upon the method suggested by J.Arrilaga and P. Bodger in 1977. The method makes use of the simultaneous solution approach. The model for HVDC transmission link is developed seperately and is incorporated in the Fast Decoupled Load Flow Method. The Fast Decoupled Load Flow Method exploits the loose physical interaction between MW and MVAR flows in power system by methamatically decoupling the MW-θ and MVAR-V calculations. Derivation of basic algorithm is as follows.

3.1.1 BASIC ALGORITHM : FAST DECOUPLED AC LOAD FLOW EQUATIONS :

The power mismatch at the bus k is given by

$$\Delta Pk = Pk - Vk \, \Sigma \, Vm(Gkm \, Cos \, \theta km + Bkm \, Sin \, \theta km) \quad \ldots (3.1)$$

$$\Delta Qk = Qk - Vk \, \Sigma \, Vm(Gkm \, Sin \, \theta km - Bkm \, Cos \, \theta km) \quad \ldots (3.2)$$

Pk -jQk = Scheduled complex power at bus K

θk, Vk = Voltage angle and magnitude at bus K

Gkm - jBkm = $(k,m)^{th}$ element of bus admittence matrix.

The well known polar power-mismatch Newton method is taken as a convinient and meaningful starting point

$$\begin{bmatrix} \Delta P \\ \Delta Q \end{bmatrix} = \begin{bmatrix} H & N \\ J & L \end{bmatrix} \begin{bmatrix} \Delta \theta \\ \Delta V/V \end{bmatrix} \quad \ldots (3.3)$$

To apply the P-Q/Q-V decoupling we neglect the coupling submatrices [N] and [J] which gives

$$[\triangle P] = [H]\ [\Delta\theta] \qquad \ldots(3.4)$$

$$[\triangle Q] = [L]\ [\triangle V/V] \qquad \ldots(3.5)$$

Where $H_{km} = L_{km} = V_k\ V_m\ (G_{km} \sin \theta_{km} - B_{km} \cos \theta_{km})$ for $m = k$

$$H_{kk} = -B_{kk}\ V_k^2 - Q_k$$

and

$$L_{kk} = -B_{kk}\ V_k^2 + Q_k$$

Equations (3.4) and (3.5) may be solved alternatively as a decoupled Newton Method reevaluating and retriangularising [H] and [L] at each iteration, but further physically justifiable assumption may be made. In power system the following assumptions are valid.

$$\cos \theta_{km} \approx 1$$

$$G_{km} \sin \theta_{km} \ll B_{km}$$

and

$$Q_k \ll B_{kk}\ V_k^2$$

Therefore good approximation to (3.4) and (3.5) are

$$[\triangle P_k] = [V_k\ B_{km}\ V_m]\ [\triangle \theta_m] \qquad \ldots(3.6)$$

$$[\triangle Q_k] = [V_k\ B_{km}\ V_m]\ [\triangle V_m/V_m] \qquad \ldots(3.7)$$

Where the elements of B' and B" are the elements of [-B] matrix. Further decoupling and finalisation of Fast Decoupled algorithm can be achieved by

(a) omitting from [B] the repersentation of those network elements that predominantly affect MVAR flows i.e. shunt reactances and off nominal in phase transformer taps.

(b) Dividing each equation by Vk and setting Vm = 1 p.u.

(c) Omitting from [B"] the angle shifting effects of phase shifts, if any.

Neglecting the series resistance in calculating [B'] which then becomes the DC approximation load flow matrix.

With the above modification the final Fast Decoupled Load Flow equations become:

$$[\triangle P/V] = [B]\ [\triangle \theta]$$

$$[\triangle Q/V] = [B]\ [\triangle V] \qquad \ldots (3.8)$$

3.1.2. PV-BUSES :

For every PV-BUSES, the Q limit is fixed and each violating bus is explicitly converted to PQ type bus so that the MVAR Output is held at the limiting value. The bus remains a PQ type bus unless at some stage it can be reconverted to a PV bus at original vol. magnitude without the violation following logic is used

If $Q_{cal} > Q_{max}$ set $Q_{sp} = Q_{max}$

If $Q_{cal} < Q_{min}$ set $Q_{sp} = Q_{min}$

where Q_{max} and Q_{min} are the maximum and minimum limiting values.

3.2.0 MODELING OF HVDC LINK :

A two terminal HVDC transimission link is incorporated which is modelled as follows :

3.2.1 D.C. LINK EQUATION :

Refering to the fig. (2.3) the following relationship can be written between the voltages on the AC and DC sides of the converter

$$Vdm = K1\ Em\ Cos\ \phi m \qquad \dots (3.9)$$

Similarily for current in P.U.

$$Im = K1\ Id$$

Taking the AC current as a phase reference and ignoring the resistence of the transformer following equation can be derived for the rectifer end (m).

$$Id\ Vdm = Em\ Im\ Cos\ \phi m$$

$$- Vm \angle\psi m\ (Am\ ym) + Em \angle\phi m\ [Am\ ym + (1-Am)\ ym] + Im\angle 0 = 0$$

$$[Em\ Cos\ \phi m + j\ Em\ Sin\ \phi m]\ [jBm] + K1\ Id$$

$$=[Vm\ Cos\ \mu m + jVm\ Sin\ \mu m]\ [Am\ jBm]$$

$$K1\ Id - Em\ Bm\ Sin\ \phi m + j\ Em\ Bm\ Cos\ \phi m$$

$$=jVm\ Am\ Bm\ Cos\ \mu m - Vm\ Am\ Bm\ Sin\ \psi m$$

$$K1\ Id = Em\ Bm\ Sin\ \phi m - Vm\ Am\ Bm\ Sin\ \psi m \qquad \dots (3.10)$$

$$0 = Em\ Cos\ \phi m - Am\ Vm\ Cos\ \mu m$$

OR in terms of DC voltage

$$0 = Vdm - K1\ Am\ Vm\ Cos\ \psi m \qquad \dots (3.11)$$

Similarly for inverter end (n)

$$V_{dn} = K_1 E_n \cos \phi_n \qquad \ldots (3.12)$$

$$K_1 I_d = - E_n B_n \sin \phi_n + V_n A_n B_n \sin \psi_n \qquad \ldots (3.13)$$

$$0 = V_{dn} - K_1 A_n V_n \cos \psi_n \qquad \ldots (3.14)$$

The equations relating the direct voltage and currents are as follows.

$$V_{dm} = K_1 E_m \cos \alpha_m - K_2 X_m I_d \qquad \ldots (3.15)$$

$$V_{dn} = K_1 E_n \cos \delta_n - K_2 X_n I_d \qquad \ldots (3.16)$$

$$V_{dm} - V_{dn} = R_{dc} I_d \qquad \ldots (3.17)$$

Equation (3.9) to (3.17) contains 13 variables which are as follows :

V_{dm}, V_{dn}, E_m, E_n, ϕ_m, ϕ_n, α_m, δ_n, A_m, A_n, ψ_m, ψ_n, I_d

To eliminate trigonometrical non linearity and avoid over flows with infeasible operation $\cos \alpha_m$ and $\cos \delta_m$ are used as variables instead of α_m and δ_n.

Four equations or control specifications are required to solve the above equations for 13 variables. These are normally the direct current I_d (or the AC power), the optimum values of the control angles ($\cos \alpha_{min.}$ and $\cos \delta_{max.}$) and the maximum nominal direct voltage of the terminal determining the transimmission voltage (normally inverter end). For optimised DC power flow conditions the control angles α_m and δ_n will be minimum (specified) values and the converter voltage control will be achieved by transformer tap variations. However critical operating condition may result in one or both converter transformer ratio reaching their upper or lower limit. When one of the transformer reaches a limiting ratio Vdn is freed and when both transformation ratios have been fully used, Cos αm or Cos δn will be feed, depending whether An or Am is at its top limit. When permanent deviation of control angle are not permitted Id (or Pd) will be freed instead.

3.2.2 DC JACOBIAN MATRIX EQUATION:

The independent variables which describe the state of the DC link can be obtained in the same manner as the AC system variables V & θ by applying Newton-Raphson algorithm for solving the non-linear equations. The correction vector or increments $\triangle X$ can be obtained from the solution of the DC Jacobian matrix equation

$$[R] = [A]\ [\triangle X]$$

Where R are the residuals for the non-linear equation (from 3.9 to 3.12) representing the DC link power flow and control strategies. These can be obtained by subsracting the R.H.S. from L.H.S. of the equations (from 3.9 to 3.17) and the control equations and can be given as follows.

$$R1 = Vdm - K1\ Em\ Cos\ \phi m$$

$$R2 = Vdn - K1\ En\ Cos\ \phi n$$

$$R3 = K1\ Id - Bm\ (Em\ Sin\ \phi m - Am\ Vm\ Sin\ \psi m)$$

$$R4 = K1\ Id + Bm\ (En\ Sin\ \phi n - An\ Vn\ Sin\ \psi n)$$

$$R5 = Vdm - K1\ Em\ Cos\ \alpha m + K2\ Xm\ Id$$

$$R6 = Vdn - K1\ En\ Cos\ \alpha n + K2\ Xn\ Id$$

$$R7 = Vdm - K1\ Am\ Vm\ Cos\ \psi m$$

$$R8 = Vdn - K1\ An\ Vn\ Cos\ \psi n$$

$$R9 = Vdm - Vdn - Rdc\ Id$$

$R10 = Vdm\ Id - Pdm^{sp}$

$R11 = Cos^{sp}\alpha m - Cos\ \alpha m$

$R12 = Cos^{sp}\delta n - Cos\delta n$

$R13 = Vdn^{sp} - Vdn$

A is the matrix of the first order differentials $(-\partial R_k)/\partial Xi$ for K, i = 1, ... n.

The first nine equations for R_1, R_2, ... R_9 are obtained for the system equation (3.9) to (3.17) and the last four equation for R_{10} - R_{13} are the control equations.

3.3 INTEGRATED AC/DC JACOBIAN MATRIX :

Taking into account the interdependence of active and reactive power residuals of AC system and DC link variables and also between R and AC system variables. The AC system and DC link Jacobian matrix can be combined. This may lead to the simultaneous solution of the integrated system.

With the Newton Raphosn method, the combined Jacobian for integrated system can be given as :

$$\begin{bmatrix} \Delta P \\ \Delta Q \\ R \end{bmatrix} = \begin{bmatrix} H & N & D \\ J & L & E \\ B & C & A \end{bmatrix} \begin{bmatrix} \Delta \theta \\ \Delta V/V \\ X \end{bmatrix} \qquad \ldots (3.19)$$

The submatrices H, N,J and L have the same structure and values as in AC system except for the diagonal elements associated with the bus bars to which the DC link is connected. The sub matrices B, C, D and E are highly sparse. Consist of mainly zero elements except for a few elements associated with the rectifier and inverter AC bus bar. By taking into account the decoupling between P & Q. We have N & J = [0] and for the DC system equation B = [0]. The active and reactive power mismatches at bus bars connected to DC link are influenced by DC link variables. Therefore the ΔX is to be evaluated for every iteration alongwith ΔP and ΔQ as follows. If we take it only with ΔQ as follows :

$$\begin{bmatrix}\Delta Q\\ R\end{bmatrix} = \begin{bmatrix}0 & L & E\\ B & C & A\end{bmatrix}\begin{bmatrix}\Delta\theta\\ \Delta V/V\\ \Delta X\end{bmatrix}$$

$$\begin{bmatrix}\Delta P\end{bmatrix} = \begin{bmatrix}H & 0 & D\end{bmatrix}\begin{bmatrix}\Delta\theta\\ \Delta V/V\\ \Delta X\end{bmatrix}$$

Then the solution will take longer time to converge because X is updated alongwith ΔQ only.

3.3.1 From the above consideration the Integrated Jacobian can be represented into two decoupled matrix equations. i.e. ΔP, R combination and ΔQ, R combination as follows.

$$\left[\begin{array}{c}\Delta Qk/Vk\\ \hline \Delta Qm/Vm\\ \Delta Qn/Vn\\ \hline R\end{array}\right] = \left[\begin{array}{c:c:c}\multicolumn{2}{c:}{B''} & \text{Zero Elements}\\ \hline B & B'' & AA''\\ \hline \text{Zero Elements} & BB' & A\end{array}\right]\left[\begin{array}{c}\Delta Vk\\ \hline Vm\\ Vn\\ \hline \Delta X\end{array}\right] \qquad \ldots (3.20)$$

$$\begin{bmatrix} \Delta Q/V \\ R \end{bmatrix} = \begin{bmatrix} BQ \\ \end{bmatrix} \begin{bmatrix} \Delta V \\ \Delta X \end{bmatrix} \qquad \ldots (3.21)$$

In this the matrix B" is same as for AC system alone i.e. constant and symmetrical in value and position except for diagonal elements associated with the rectifier and inverter bus bars. Sub matrices A and AA" are non symmetric and their elements vary at every iteration. All these matrices are highly sparse. The value of these matrices is given in appendix.III.

3.3.2: The Δ P and R combined Jacobian can be given as :

$$\begin{bmatrix} \Delta P \\ R \end{bmatrix} = \begin{bmatrix} B' & 0 & DD' \\ BB' & CC & A \end{bmatrix} \begin{bmatrix} \Delta \theta \\ \Delta V \\ \Delta X \end{bmatrix}$$

The real power at a bus bar connected to a converter terminal (m) can be given by

$Pm = Pm(ac) + Pm\ (dc)$

Though variables in equation (3-21) are considered part of DC link model, the power Pm (DC) flows across the transformer on the AC side of the converter. Hence its derivative and can be ignored in the same manner as

$$\frac{\delta\ Pm(ac)/Vm}{\delta Vm} = 0 \text{ (Due to decoupling principle)}$$

The dependence of R on AC bus bar voltages is already incorporated in equation (3.20) and need not to be duplicated and then sub matrices CC becomes zero. Since R does not depend on θ therefore the sub matrices BB' is a square matrix of zero elements. Thus the equation (3.21) transform to the following equation.

$$\left[\begin{array}{c} \vdots \\ Pk/Vk \\ \vdots \\ \vdots \\ \hdashline Pm/Vm \\ Pn/Vn \\ \hdashline \vdots \\ \vdots \\ R \\ \vdots \\ \vdots \end{array}\right] = \left[\begin{array}{c:c} & \text{Zero} \\ B' & \text{elements} \\ & \\ & \\ \cdashline{2-2} & \\ & DD' \\ \hdashline & \\ \text{Zero} & \\ \text{elements} & A \\ & \\ & \end{array}\right] \left[\begin{array}{c} \vdots \\ \theta k \\ \vdots \\ \vdots \\ \hdashline \theta m \\ \theta n \\ \hdashline \vdots \\ \vdots \\ X \\ \vdots \\ \vdots \end{array}\right]$$

The matrices DD' and A are non symetric and their elements vary at each iterations. The submatrices B' as same as for AC system in absence of DC link i.e. constant and symmetrical in value and position.

One DC link is represented by 13 variables and solution require 4 control equation or control specification which are as follows :

(a) Constant Voltage Control Mode

$$Vd = Vd$$

$$Cos^{sp}\delta n = Cos\ \delta n$$

or

$$Cos^{sp}\alpha m = Cos\ \alpha m$$

(b) Constant Current Control Mode

$$Id^{sp} = Id$$

(c) Constant Power Control Mode

$$Pd^{sp} = Pd$$

These are chossen depending upon the control stratiges adopted.

3.4 REACTIVE POWER REQUIREMENT :

The reactive power requirement of the converter is very high and has bearing on the cost of the terminal. The reactive power requirment can be optimised by adopting the suitable control stretegies.

The reactive power can be given by

$$Qi = Pi\ Tan(\alpha i \text{ or } \delta i)$$

Thus to keep the reactive power requirment at minimum the converters are operated at minmum specifed value of α or δ. When operating on constant current, the reactive power demand at low powers can be very high. However such condition is prevcuted in HVDC converters by the addition of the on-load transformer tap changes. Which try reduce the steady state control angle (or extinction angle) to the minmum specified value. Typical variation of reactive power demand vs. active power for an HVDC converter is shown in fig. below.

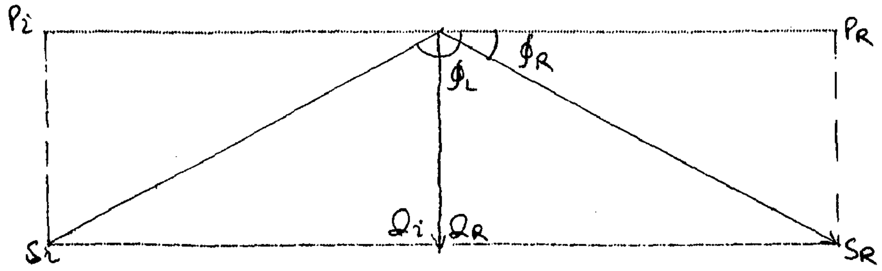

The reactive power demand is approximately 60% of the power transmitted at full load. Thus by keeping α and δ at minimum and optimising the tap position the reactive power demand can be optimised.

----- 0 -----

CHAPTER IV

CHAPTER IV

ALGORITHM, FLOWCHART AND COMPUTER PROGRAMMING :

In this chapter algorithm, flowchart and computer programming for load flow method of integrated AC/DC system have been explained. The computer program for the method is given in Appendix.

4.1 ALGORITHM AND FLOW CHART :

The flow chart is based upon equations (3-9) to (3-24). The significant steps are as follows.

(i) The matrix [BP] and [BQ] are formed using equation (3-9) to (3-24).

(ii) Assume the bus voltages except PV buses and angles for all buses except slack bus where it is specified.

(iii) Set the iteration count to 1.

(iv) The real and reactive powers are calcuated using equations (2-8) and (2-9).

(v) Reactive power limit for the PV buses is checked and if reactive power at any bus exceeds the limit then fix spcified power at the limit and the bus is converted to load bus.

(vi) Then the difference of scheduled and calculated reactive power using equation (Qsch - Qcal) for all load buses is calcuated and D.C residuals is calculated using equations R1 to R13 (given in chapter III)

(vii) The inverse of matrix [BQ] is obtained and the correction values for voltages and D.C variable is obtained by multipyling [BQ]-1 with the mismatch $[\Delta Q/V]$

(viii) The new values of voltage and D.C link variables is calulated by adding the correction value to their previous values.

(ix) After geting the new values, the real power is calculated and then the real power mismatch for all buses except seack bus alongwith D.C. variables is being calculated.

(x) Then the inverse of matrix [BP] is calculated and then the correction value for angle θ and D.C link variable is obtained by multiplying [BP]-1 with the mismatch $[\Delta P/V]$.

(xi) The new values of θ and D.C link variables are being calculated by adding the correction values to their previous values.

(xii) Test for convergence is to check the value of power mismatch alongwith value of D.C. residuals against the given tolrances.

(xiii) If the covergence is obtained and D.C. feasible soulution is obtained then the line-flow bus powers are calculated. If the convergence is not obtained then increase the iteration count and go to step III.

The flow chart is given in fig.(APPENDIX)

4.2 COMPUTER PROGRAMMING :

The large scale programs incorporate many automatic features to facilitate their use in power system planning operation and inter connection studies. The principle objectives of these are to make max. use of the computer's capability and to minimise the manual operation required for specifying and maintaining system data for the initial and subsequent load flow cases.

The complete computer programming for Fast Decoupled Load Flow for Integrated HVDC/AC system load flow are given in Appenidx [III]. Various important points in the programming are as follows.

4.2.1 Input Data :

The input program facilitates to read into the computer the power system data for flow calculation. This data is converted for proper computer representation. The data is assembled and read as follows :

(i) NB = no. of buses
MB = no. of PV Buses including slack bus
NL = no. of lines
NT = no. of transformers
NBCAP = No. of buses at which capacitor is connected

(ii) LINE = line number
SB = starting bus for the line

EB = ending bus for the line

NBC = bus no. to which the capacitor is connected

(iii) R = line resistance in p.u.

X = DC link variables in p.u.

XA = line reactance in p.u.

Rdc = DC line resistence in p.u.

YST = line charging susceptance in p.u.

TR = Off nominal turns'ratio of the transformer corresponding to line no., starting bus, ending bus

Ycap = Admittance of the capacitor connect to a bus

(iv) V = Bus Voltage

θ = Bus angle

PG = Active or real power generated

QG = reactive power generated

PL = Active power (load)

QL = Reactive power (load or absorbed)

QA = Max. reactive power limit at PV bus

QB = Min. reactive power limit at PV bus

ALPHMS = specified

DELTNS = specified

VDNS = specified DC voltage at inverter end

EPSV = tolerance for reactive power mismatch

ESPTH = tolerance for active power mismatch

PDMS = specified DC power

4.2.2 ASSEMBLY OF DATA :

The data are assembled in the following manner for convenience.

(i) The bus no. 1 is taken as slack bus

(ii) All P.V. buses are taken serially, starting with slack bus and data are arranged accordingly.

(iii) The last two buses are those to which DC link is conected i.e. last but one becomes rectifier end and last bus becomes inverter end.

4.2.3 FORMULATION OF ADMITTENCE BUS :

The formulation of y bus (for AC) is included in the main program.

4.2.4 INTEGRATED AC/DC LOAD FLOW PROGRAM :

The program is based upon Fast Decoupled Load Flow Method. Following routines are used in the program

1. SUBROUTINE POWER :

In this subroutine the real and reactive power at buses are being calculated.

2. SUBROUTINE MULT :

The correction vector is obtained by multiplying the inverse of Jacobian matrix with the vector [P/V] or [Q/V].

3. SUBROUTINE MAX. :

In this subroutine the max. value of the (DPV or DQV and R) is obtained.

4. SUBROUTINE YBPP :

   The combined AC/DC Jacobian matrix [BP] corresponding to active power and residuals is calculated.

5. SUBROUTINE YBQQ :

   The combined AC/DC Jacobian matrix [BQ] corresponding to reactive power and residuals is obtained.

6. SUBROUTINE RES :

   In this subroutine, the DC residuals have been calculated.

7. SUBROUTINE DLDPV :

   In this subroutine the difference in real power along with DC residuals vector [ΔP/V] is obtained.

8. SUBROUTINE DEVIDP :

   The correction in angles (DTH) is seperated from the correction in DC variables (DX).

9. SUBROUTINE ADDTH :

   In this subroutine the correction (DTH) and (DX) are added to previous values to get new values of angles and DC variables.

10. SUBROUTINE DLDQV :

    The difference in reactor power along with DC residuals vector [ΔQ/V] is being calcualted in this subroutine.

11. SUBROUTINE ADDV :

    In this subroutine the the correction (DV) and (DX) are added to the previous values of voltages and DC variables to get new values for them.

12. SUBROUTINE MINV :

In this subroutine the inverse of Jacobian matrix is obtained. The Gauss-Jordan Method with partial pivoting has been used for matrix inversion.

13. SUBROUTINE ARRAY :

This subroutine is used for converting the double array to single and vice-versa. It is required alongwith the inverse subroutine.

14. SUBROUTINE LINPOW :

In this subroutine line power flows are being calculated.

4.3 VALIDATION OF THE TEST PROGRAM:

The program for Fast Decoupled Load Flow for AC system was developed first and tested on six bus system [10], 14 bus system [12], (IEEE standard system) and NTPC system. The program was further modified for intergrated AC/DC system and study were carried out on AEP 14 [12] bus system [12] by replacing one line by DC link.

OUTPUT DATA :

The output is obtained as follows :

(i) PLN = line power active between buses in one direction (1 - 2)

(ii) QLN = line power (reactive) between the buses in reverse direction (2 -> 1) active and reactive power at bus

(iii) P,Q = voltage and angle at a bus

(iv) V,θ = voltage and angle at a bus.

---- 0 ----

CHAPTER V

CHAPTER-V

DATA, STUDY RESULTS & CONCLUSION:

DATA: The data for AEP-14 Bus system and NTPC system are given in Appendix I from table no.(5·1·1) to (5·1·6).

STUDY RESULTS:

On the developed program, study for AEP system and NTPC system as shown in fig (5·2) & (5·3) were carried out.

The AEP system has the operating point given in Appendix I.The results for AEP system given in table no.(R-2)and shown in fig no.(5·2·2) are varified with the results given in ref no (4) and are reproduced in table no. (R-1). This validates the program.

The NTPC system includes a Bipolar HVDC line carring 1500 MW power at ± 500 KV to Delhi region from Rihand super thermal power region.

The case studies carried out for NTPC system include.

(i) At Nominal firing angles(α =15 & δ=17) as indicated in the data.

(ii) At firing angles (α = 8 & δ = 21)

The results of converged load flow results for NTPC system as given in table no.(R-3) & (R-4) and in fig no. (5·3·2) & (5·3·3) closely agree with the available results of system studies with NTPC which are shown in fig no. (5·3·1)

The number of iterations required with flat start for voltage and bus angles for AEP system and NTPC system were 8 & 6 respectively.

CONCLUSION :

The developed program has worked well and the results obtained are on expeted lines. The reactive power at the AC bus of the rectifier end of HVDC link has been reduced by reducing the firing angle. The diffrence in active power between the rectifier and inverter end is slightly smaller th~~e~~an given in NTPC results. Apperently this is due to the value of DC line resistence.

SCOPE OF FUTURE WORK :

The present program could easily be modified to follow the algorithm proposed by R.M.Mathur (14) and may prove to be useful for large sustem studies. This program could also be modified further for multiple HVDC lines or multiterminal HVDC schemes.

AEP-14 BUS SYSTEM

GIVEN RESULTS

BUS NO.	VOLT	THETA
1	1.060	.000
2	1.045	-5.020
3	1.010	-12.700
4	1.090	-14.280
5	1.070	-14.200
6	1.050	-15.300
7	1.090	-14.300
8	1.050	-16.400
9	1.070	-15.500
10	1.070	-15.600
11	1.060	-15.100
12	1.060	-15.100
13	1.030	-8.740
14	1.060	-11.200

DC PARAMETER :

FIRING ANGLES : $\alpha = 9.05, \delta = 10^{\circ}$

TURNS RATIO : Am=.9193 An= .9167

DC VOLTAGE : Vdm=1.286, Vdn=1.284

DC CURRENT : Id=.456

DC POWER : Pdm=.586, Pdn=.586

TABLE NO.(R-1)

AEP-14 BUS SYSTEM

TEST RESULTS

BUS NO.	VOLT	THETA
1	1.0600	.0000
2	1.0450	-5.0143
3	1.0100	-12.5786
4	1.0900	-14.3077
5	1.0700	-14.2855
6	1.0545	-15.3385
7	1.0915	-14.3077
8	1.0535	-16.5657
9	1.0842	-15.7842
10	1.0743	-15.8142
11	1.0687	-15.2059
12	1.0574	-15.1722
13	1.0348	-8.8655
14	1.0845	-11.5628

<u>DC PARAMETER:</u>

FIRING ANGLES : $\alpha = 9.05$ & $\delta = 10.$
DC VOLTAGE : Vdm =1.286, Vdm=1.284
DC CURRENT : Id =.461
REACTIVE POWER: Qdm =.155, Qdn=.202
DC POWER : Pdm =.599, Pdn=.598
TURNS RATIO : Am =.950, An =.925

TABLE (2-2)

NTPC SYSTEM:CASE I

TEST RESULTS

BUS NO.	VOLT	THETA
1	1.0540	-13.6937
2	1.0240	26.9976
3	1.0240	22.7988
4	1.0580	-22.7515
5	1.0520	28.3214
6	1.1910	-7.9103
7	1.0520	-1.8649
8	1.0426	8.0827
9	1.0206	21.0659
10	1.0022	17.2630
11	1.0589	-.4711

DC PARAMETER :

FIRING ANGLES : α=15, δ=17

DC VOLTAGE :Vdn=1.173 Vdm=1.191

DC CURRENT : Id=3.30

TURNS RATIO : Am=1.105 An=.877

REACTIVE POWER: Qdm=11.94, Qdn=5.87

DC POWER : Pdm=15.70, Pdn=15.44

TABLE NO.(R-3)

NTPC SYSTEM: CASE II

TEST RESULTS

BUS NO.	VOLT	THETA
1	1.0540	-13.6937
2	1.0240	27.1791
3	1.0240	22.9696
4	1.0580	-22.8324
5	1.0520	28.5058
6	1.1910	-7.7191
7	1.0445	-1.7381
8	1.0414	8.3029
9	1.0226	21.2594
10	1.0077	17.4639
11	1.0503	-.3183

DC PARAMETER:

FIRING ANGLE : α= 8, δ= 21
DC VOLTAGE : Vdm= 1.192, Vdn= 1.173
DC CURRENT : Id= 3.30
TURNS RATIO : Am= 1.068, An= .901
REACTIVE POWER: Qdm= 10.98, Qdn= 6.71
DC POWER : Pdm= 15.70, Pdn= 15.43

TABLE NO.(R-4)

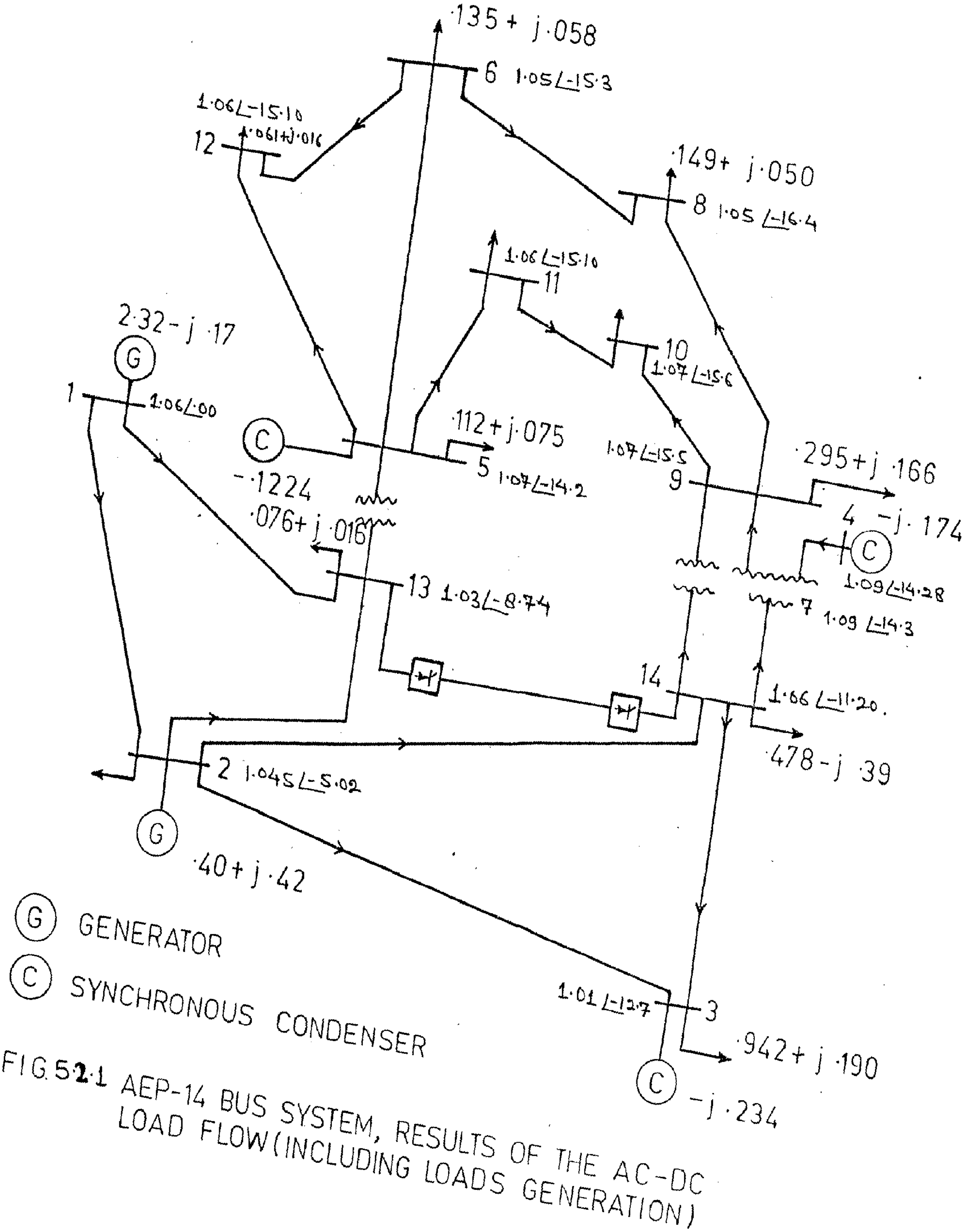

FIG.5·2·1 AEP-14 BUS SYSTEM, RESULTS OF THE AC-DC LOAD FLOW (INCLUDING LOADS GENERATION)

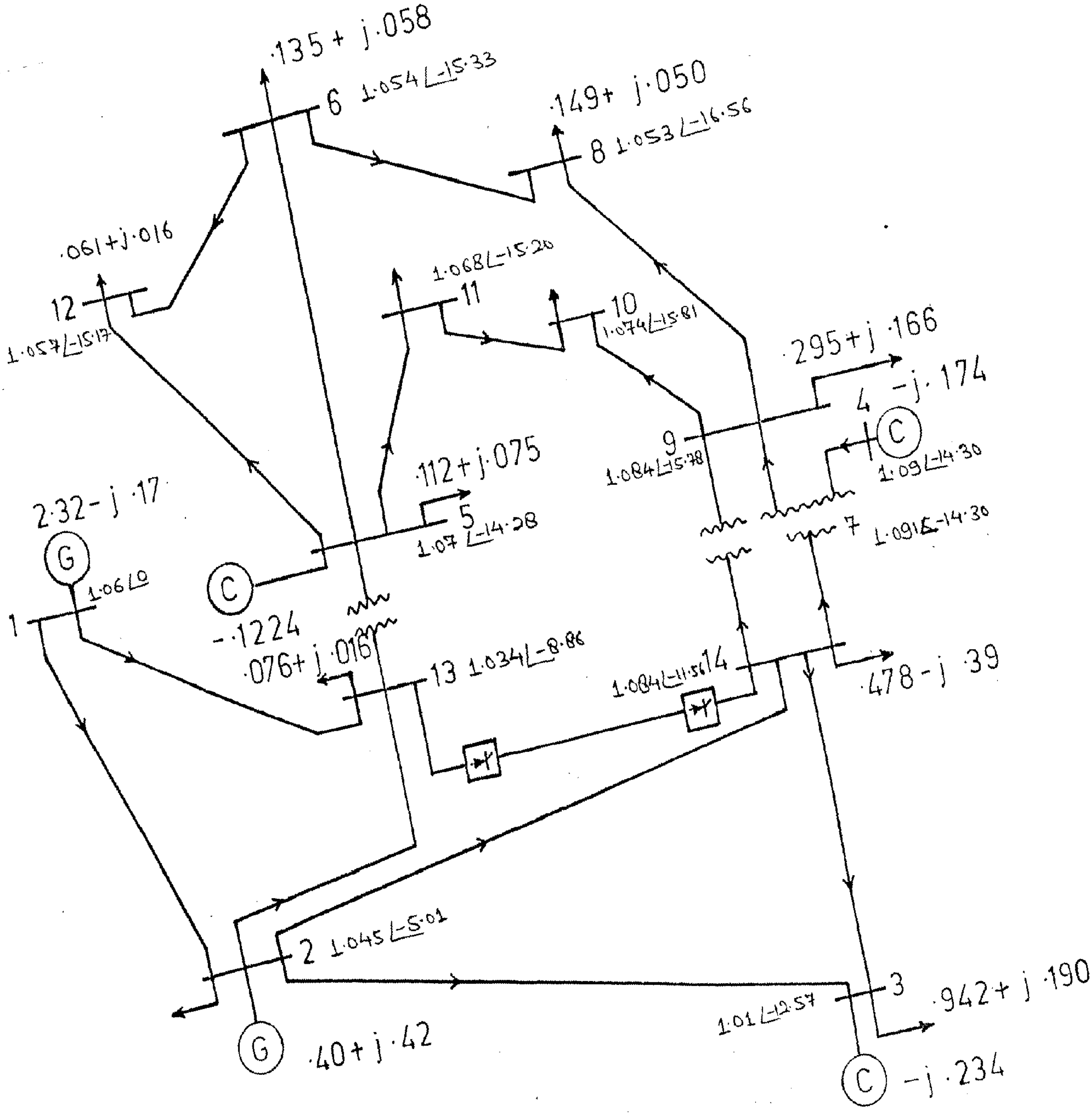

(G) GENERATOR

(C) SYNCHRONOUS CONDENSER

FIG. 5·2·2 AEP-14 BUS SYSTEM, RESULTS OF THE AC-DC LOAD FLOW (INCLUDING LOADS GENERATION)

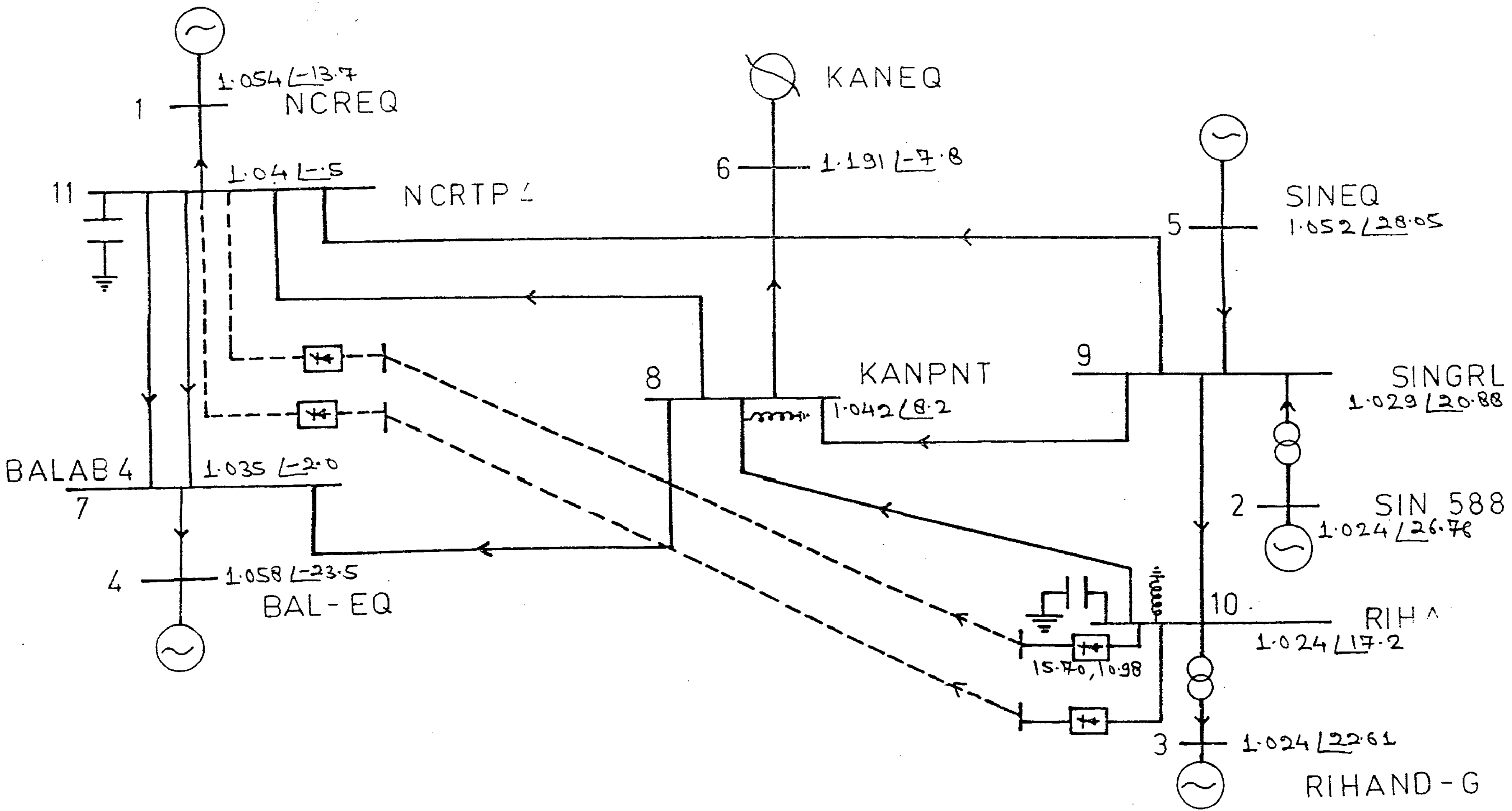

FIG. 5.3.1 NTPC SYSTEM INCLUDING LOAD FLOW RESULTS

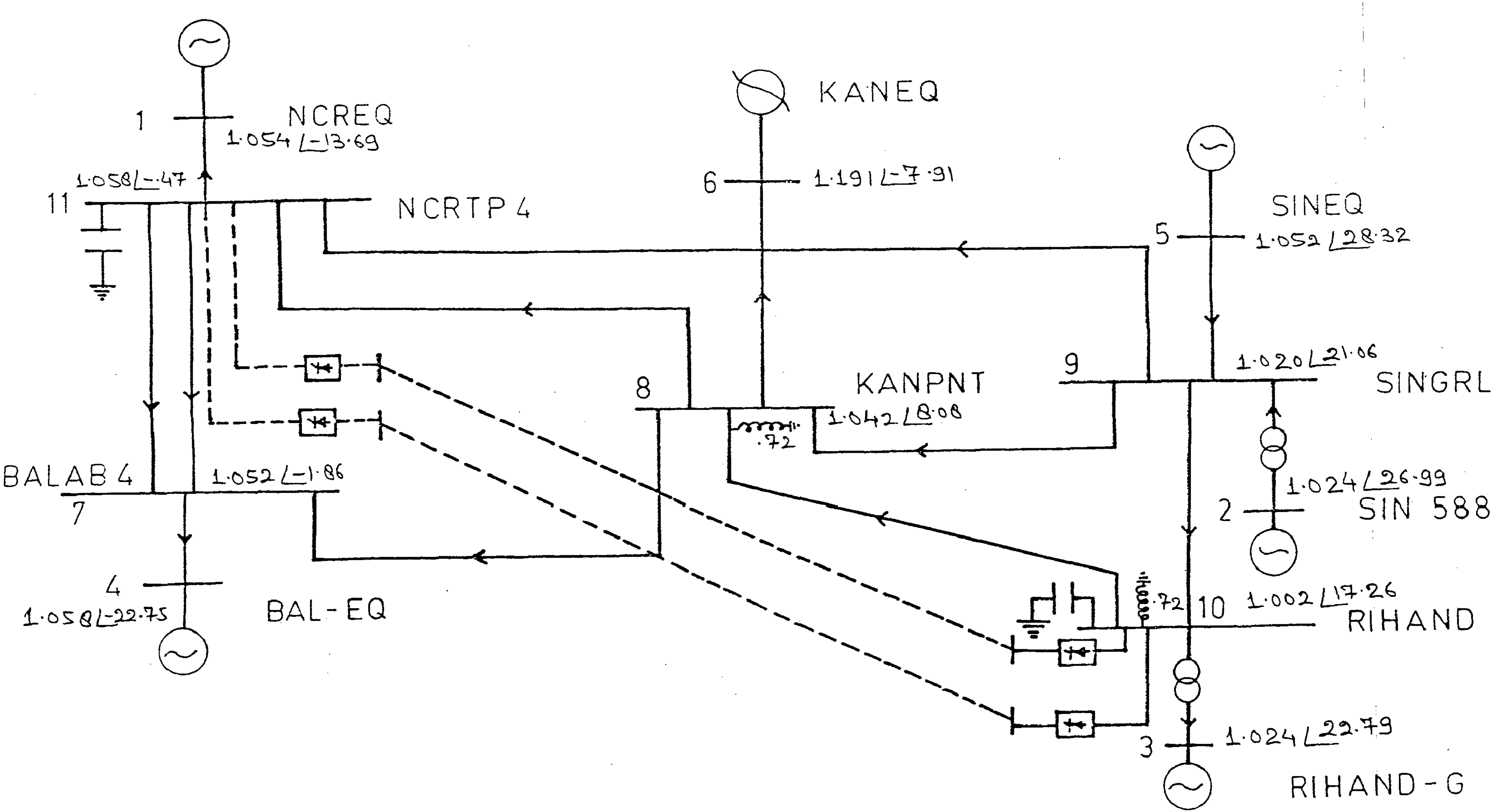

FIG.5·2·2 NTPC SYSTEM INCLUDING LOAD FLOW RESULTS

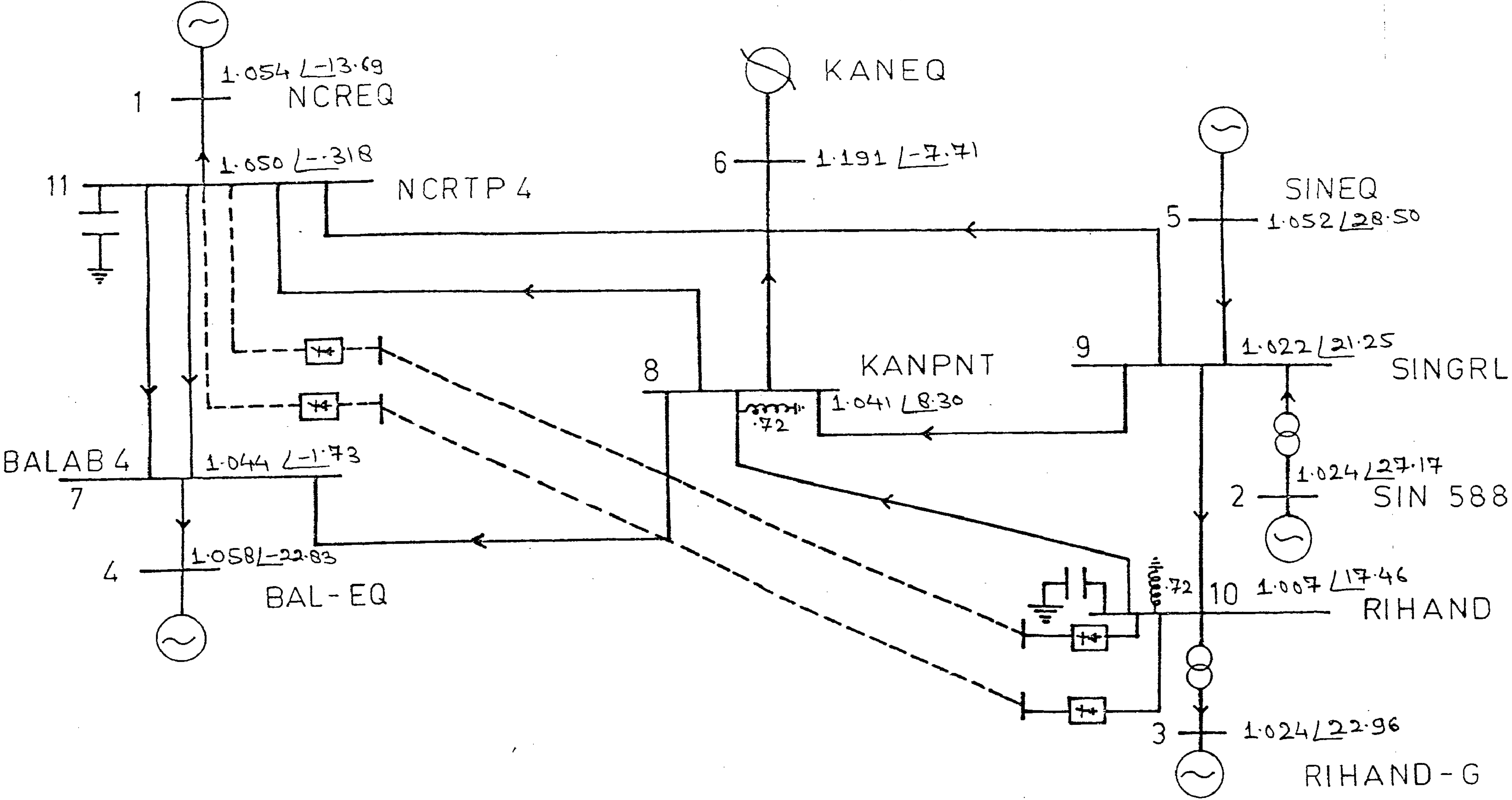

FIG. 5·3·3 NTPC SYSTEM INCLUDING LOAD FLOW RESULTS

REFERENCES

1. Tinney W.F., Brown R.J. ; "Digital Solution For Large Power Networks." AIEE, Trans, PAS-76, PP 347-355, JUN 1957.
2. Tinney W.F., Hart C.F. ; "Power Flow Solution By Newton Method." IEEE, Trans, PAS-89, PP 1449-1460, 1967.
3. Donnel H.W., Tinney W.F. ; "Optimal Power Flow Solution." IEEE, Trans, PAS-87, PP 1866-1876, OCTO. 1968.
4. Sato H., Arrilaga J. ; "Improved Load Flow Technique For AC-DC System." Proceed. Of IEE, Vol-116, No.4, APRIL 1969.
5. Sttot B. ; "Decoupled Newton Load Flow." IEEE , Trans, PAS-91, PP 1955-1959, SEPT/OCTO 1972.
6. Reeve J., Carr J. ; "Review Of Load Flow Technique For HVDC Multiterminal Systems." IEE Int.Conf.Pub. HVAC/DC Transmission. DEC. 1973.
7. Sttot B., Aslac O. ; "Fast Decoupled Load Flow." IEEE , Trans, PAS-93, PP 859-869, MAY/JUNE 1974.
8. Sttot B. ; "Review Of Load Flow Calculations Methods." Proceed. Of IEEE, Vol-62, No.7, JULY 1974.
9. Haff H.H. ; "Diakoptics - The Solution Of System Problems By Tearing." Proceed. Of IEE, Vol-62, No.7, JULY 1974.
10. Kraft L.A., Braunagel D.A.; "Inclusion Of DC Converter And Transmission Equations Directly In A Newton Power Flow." IEEE, Trans, PAS-95, PP 76-88, 1976.

11. Arrilaga J., Bodger P. ; "Integration Of HVDC Links With Fast Decoupled Load Flow Solutions." Proceed. Of IEE , Vol-124, No.5, MAY 1977.

12. Reeve J., Fahmy G. ; "Versatile Load Flow Method For Multiterminal HVDC Systems." IEEE, Trans, PAS-96, PP 925-932, MAY/JUNE 1977.

13. Arrilaga J., Boger P. ; "AC-DC Load Flow With Realistic Representation Of The Converter Plant." Proceed. Of IEE, Vol-125, No.1, PP 41-46, 1978.

14. Mathur R.M., Elmarsafamy M.M. ; "A New Fast Technique For Load Solution Of Integrated Multiterminal AC-DC Systems." IEEE, Trans, PAS-99, No.1, JAN/FEB 1980.

15. Ong C.M. ; "A General Purpose Multiterminal DC Load Flow." IEEE, Trans, PAS-100, No.7, JULY 1981.

BOOKS

16. Kimbark E.W. ; "Direct Current Transmission." Wiley-Interscience, 1971.

17. Elegard O.I. ; "Electric Energy System Theory: An Introduction." MacGraw-Hill International Book Company, New York, 1971.

18. Weedy B.M. ; "Electric Power System." John Wiley & Sons, New York, 1979.

19. Pai M.A. ; "Computer Techniques Power System Analysis." MacGraw Hill Publishing Company Ltd, New Delhi, 1979.

20. Kothari D.P., Nagrath I.J. ; "Modern Power System Analysis." Tata-MacGraw Hill Publishing Company Ltd, New Delhi, 1980.

21. Stagg G.W., El-Abiad A.H. ; "Computer Methods In Power System Analysis." MacGraw Hill International Book Company, NewYork 1981.

22. Arrilaga J. ; "High Voltage Direct Current Transmission." Peter Peregrims Ltd, 1983.

APPENDIX

DC SYSTEM DATA:

AEP-14 BUS SYSTEM

	Converter	Inverter
Transformer reactances p.u.	0.126	0.07275
No. of tap positions	27	19
Regulation range %	± 15	± 15
Communication reactance	0.126	0.07275
DC link power setting	0.586	-
Minimum delay angle αm	7	-
Minimum extinction angle δn	-	10
DC link voltage	-	1.284
Resistance of DC line	0.00334	

NTPC SYSTEM :

Nominal Power Rating	1500 MW
Nominal DC Voltage	± 500 KV
Nominal Current	1568 A.
Nominal DC resistance	10.76 Ω
Nominal firing angle α	15°
Nominal extinction angle δ	17°

Converter transformer rating :

Rihand Station : 945 MVA
Delhi Station : 915 MVA

Commutating reactance :

Rihand Station : 18.8%
Delhi Station : 18.2%

No. of series 6 pulse bridges : 2

Electrical line resistance = 0.51 Ω
Ground Electrode resistance = 0.1 Ω

Nominal turns ratios :

Rihand Station : 400/213
Delhi Station : 400/206

No. of taps on primary +14 & -10 for both Rihand & Delhi.

Tap Size = 1.25%

Nominal AC Voltage at both sides = 400 KV

NTPC SYSTEM

LINE DATA

LINE NO.	SB	EB	R	X	YST
1	11	1	.00180	.01800	.00000
2	11	7	.00120	.01220	.34240
3	11	7	.00080	.01070	.00000
4	11	8	.00240	.07840	.00000
5	11	9	.00000	.25800	.00000
6	10	9	.00070	.00810	.22830
7	10	8	.00790	.09150	2.56000
8	10	3	.00000	.01100	.00000
9	9	5	.00050	.01040	.00000
10	9	8	.00203	.03160	.00000
11	9	2	.00000	.02400	.00000
12	8	6	.00980	.07500	.00000
13	8	7	.00346	.06770	.00000
14	7	4	.00560	.05260	.00000

TABLE NO. (5.1.4)

NTPC SYSTEM

BUS DATA

BUS NO.	V	TH	Q MAX	Q MIN
1	1.05400	-.23900	2.25000	-1.00000
2	1.02400	.00000	2.25000	-1.00000
3	1.02400	.00000	2.25000	-1.00000
4	1.05800	.00000	30.00000	-1.00000
5	1.05200	.00000	30.00000	-1.00000
6	1.19100	.00000	30.00000	-1.00000
7	1.00000	.00000	.00000	.00000
8	1.00000	.00000	.00000	.00000
9	1.00000	.00000	.00000	.00000
10	1.00000	.00000	.00000	.00000
11	1.00000	.00000	.00000	.00000

TABLE NO.(5.1.5)

NTPC SYSTEM

BUS DATA

BUS NO.	PG	QG	PL	QL
1	.0000	.0000	.0000	.0000
2	4.5000	.0000	.0000	.0000
3	9.0000	.0000	.0000	.0000
4	-7.3000	.0000	.0000	.0000
5	13.2000	.0000	.0000	.0000
6	-4.1000	.0000	.0000	.0000
7	.0000	.0000	.0000	.0000
8	.0000	.0000	.0000	.7200
9	.0000	.0000	.0000	.0000
10	.0000	4.0000	.0000	.7200
11	.0000	4.0000	.0000	4.2700

TABLE NO. (5·1·6)

AEP-14 BUS SYSTEM

LINE DATA

LINE NO.	SB	EB	R	X	YST
1	1	2	.01930	.05910	.05280
2	1	13	.05400	.22300	.04920
3	2	3	.04690	.19790	.04380
4	2	14	.05810	.17630	.03740
5	2	13	.05690	.17380	.03400
6	3	14	.06700	.17100	.03460
7	6	8	.17090	.34800	.00000
8	14	7	.00000	.20910	.00000
9	14	9	.00000	.55610	.00000
10	13	5	.00000	.25200	.00000
11	5	11	.09490	.19890	.00000
12	5	12	.12290	.25580	.00000
13	5	6	.06610	.13020	.00000
14	7	4	.00000	.17610	.00000
15	7	9	.00000	.11000	.00000
16	9	10	.03180	.08450	.00000
17	9	8	.12710	.27030	.00000
18	10	11	.08200	.19200	.00000
19	12	6	.22090	.19980	.00000

TABLE NO. (S.1.1)

AEP-14 BUS SYSTEM

BUS DATA

BUS NO.	V	TH
1	1.06000	.00000
2	1.04500	.00000
3	1.01000	.00000
4	1.09000	.00000
5	1.07000	.00000
6	1.00000	.00000
7	1.00000	.00000
8	1.00000	.00000
9	1.00000	.00000
10	1.00000	.00000
11	1.00000	.00000
12	1.00000	.00000
13	1.00000	.00000
14	1.00000	.00000

TABLE NO.(5·1·2)

AEP-14 BUS SYSTEM

GENERATION & LOAD DATA

BUS NO.	PG	QG	PL	QL
1	2.3200	-.1700	.0000	.0000
2	.4000	.4200	.2170	.1270
3	.0000	-.2340	.9420	.1900
4	.0000	-.1740	.0000	.0000
5	.0000	-.1224	.1120	.0750
6	.0000	.0000	.1350	.0580
7	.0000	.0000	.0000	.0000
8	.0000	.0000	.1490	.0500
9	.0000	.0000	.2950	.1660
10	.0000	.0000	.0900	.0580
11	.0000	.0000	.0350	.0180
12	.0000	.0000	.0610	.0160
13	.0000	.0000	.0760	.0160
14	.0000	.0000	.4780	-.0390

TABLE NO.(5·1·3.)

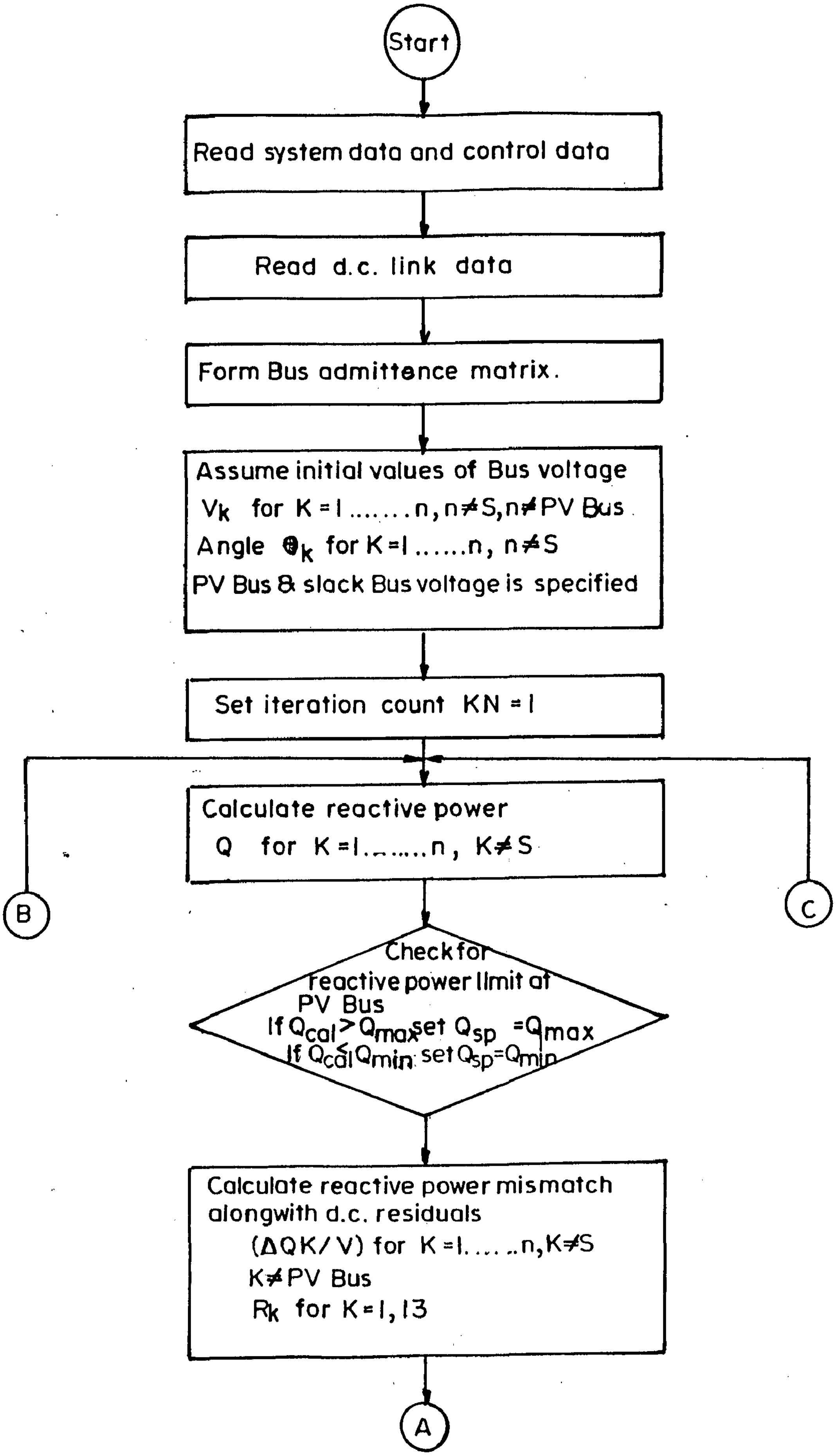
Start
Read system data and control data
Read d.c. link data
Form Bus admittence matrix.
Assume initial values of Bus voltage
V_k for K = 1 .... n, n≠S, n≠PV Bus
Angle θ_k for K = 1 ...... n, n≠S
PV Bus & slack Bus voltage is specified
Set iteration count KN = 1
Calculate reactive power
Q for K = 1 .... n, K≠S
B
C
Check for reactive power limit at PV Bus
If $Q_{cal} > Q_{max}$ set $Q_{sp} = Q_{max}$
If $Q_{cal} < Q_{min}$ set $Q_{sp} = Q_{min}$
Calculate reactive power mismatch alongwith d.c. residuals
(ΔQK/V) for K = 1 ...... n, K≠S
K≠PV Bus
R_k for K = 1, 13
A

(Contd.)

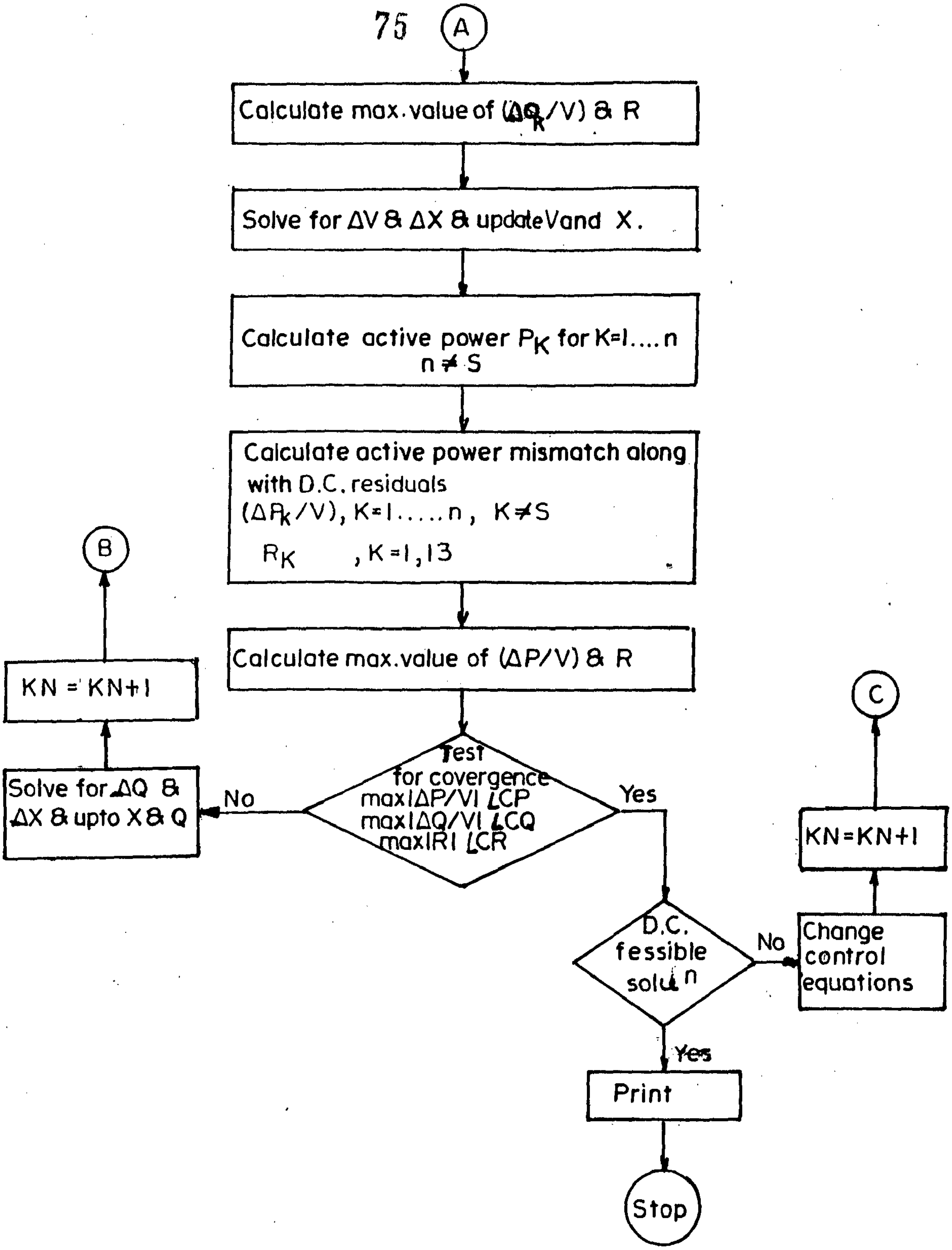

.OW CHART FOR LOAD FLOW OF INTEGRATED A.C/ D.C. SYSTEM:

APPENDIX II

-K1 COSφm		K1Em SINφm		1								
	-K1 COSφn		K1En SINφn		1							
-Bm SINφm		-BmEm COSφm				AmBmVm COS µm		K1			BmVm SIN µm	
	Bn SINφn		BnEn COSφn				-BnAnVn COS µn	K1				-BnVn SIN µn
-K1 COSαm				1				K2Xm	-K1Em			
	-K1 COSδn				1			K2Xn		-K1En		
				1		K1AmVm SIN µm					-K1Vm COS µm	
					1		K1AnVn SIN µn					-K1Vn COS µn
				1	-1			-Rdc				
				Id				Vdm				
									1			
										1		
					1							

MATRIX A

MATRIX AA'.

AmBm SIN Wm		-AmBmEm COS Wm				AmBmEm COS Wm					Em Bm SIN Wm	
	AnBn SIN Wn		-AnBnEn COS Wn				AnBnEn COS Wn					En Bn SIN Wn

MATRIX DD'.

-AmBm COS Wm		-AmBmEm SIN Wm				AmBmEm SIN Wm					-BmEmCOS Wm +2AmBmVm	
	-AnBn COS Wn						AnBnEn SIN Wn					-BnEnCOS Wn +2AnBnVn

MATRIX [BB'']^T.

		AmBm SIN µm				-K1Am COS µm						
			-AnBn SIN µn				-K1An COS µn					

WHERE Wm=(µm-ϕm)
Wn=(µn-ϕn)

APPENDIX III.

```
C         ****************************************************
C         PROGRAM FOR FAST DECOUPLED LOAD FLOW FOR DC-AC SYSTEM
C         ****************************************************
C         NB=NO. OF BUSES,NL=NO. OF LINES
C         MB=NO. OF PV BUSES,NT=NO. OF TRANSFORMAR
C         NBCAP=NO. OF BUSES WITH CAPACITORS
C         SB=STARTING BUS,EB=ENDING BUS,TR=TURN RATIO
C         YST=LINE CHARGING SUSPTANCE,Y=ADMITT. MAT.
C         ****************************************************
C         X(1)=EM,X(2)=EN,X(3)=PHYM,X(4)=PHYN,X(5)=VDM
C         X(6)=VDN,X(7)=SHYM,X(8)=SHYN,X(9)=ID,X(13)=AN
C         X(10)=COS(ALPHM),X(11)=COS(DELTN),X(12)=AM
C         VM=V(13),VN=V(14)
C         ****************************************************
          COMPLEX SERZ,SERY,Y,YCAP,YSHT,SUM
          INTEGER SB,EB,STR,BUS
          REAL K1,K2
$         LARGE
          DIMENSION XA(30),RB(30),YST(30),SB(30),EB(30),R1(30)
          DIMENSION V(30),TH(30),TR1(25),SB1(25),EB1(25),DX(20)
          DIMENSION PG(30),QG(30),PL(30),QL(30),DV(30),DPX(30),C(30,30)
          DIMENSION QA(30),QB(30),V1(30),TH1(30),DTH(30),DQX(30)
          DIMENSION SERZ(30),YSHT(30),SERY(30),DPV(30),DP(30),YCAP(10)
          DIMENSION P(30),Q(30),P1(60),Q1(30),DQV(30),DQ(30),DQVN(30)
          DIMENSION B(30,30),BP(30,30),BQ(30,30),BUS(10,10),P2(30),Q2(30)
          DIMENSION BPINV(30,30),BQINV(30,30),THETA(30),S2(900),NBC(10)
          DIMENSION TR(25),Y(30,30),LINE(30),RA(30),S3(900),S1(900)
          DIMENSION BPP(30,30),BQQ(30,30),R(20),X(20),LL(30),MM(30)
          DIMENSION PLN(30),QLN(30),PLNR(30),QLNR(30),LL1(30),MM1(30)
          DIMENSION PLNF(30),QLNF(30),PLNFR(30),QLNFR(30),LL2(30),MM2(30)
          DIMENSION BL(30,30),STORE(30),Q1L(30),BQL(30,30),BQLINV(30,30)
          OPEN(UNIT=1,FILE='ADC3.DAT')
          OPEN(UNIT=2,FILE='ADC3.RES')
          READ(1,*) NB,NL,MB,NT,NBCAP
          PI=4*ATAN(1.0)
          K1=(3.0*SQRT(2.0))/PI
          K2=3.0/PI
          N1=NB-1
          N2=NB+12
          K3=NB-MB
          K4=NB+13
          K5=NB-MB+13
          READ(1,*)(LINE(I),I=1,NL)
          READ(1,*)(SB(I),I=1,NL)
          READ(1,*)(EB(I),I=1,NL)
          READ(1,*)(RB(I),I=1,NL)
          READ(1,*)(XA(I),I=1,NL)
          READ(1,*)(TR(I),I=1,NL)
          READ(1,*)(YST(I),I=1,NL)
          READ(1,*)(V(I),I=1,NB)
          READ(1,*)(TH(I),I=1,NB)
          READ(1,*)(PG(I),I=1,NB)
          READ(1,*)(PL(I),I=1,NB)
          READ(1,*)(QG(I),I=1,NB)
          READ(1,*)(QL(I),I=1,NB)
          READ(1,*)(QA(I),I=1,MB)
          READ(1,*)(QB(I),I=1,MB)
          READ(1,*)EPSV,EPSTH
          READ(1,*)(NBC(I),YCAP(I),I=1,NBCAP)
          READ(1,*)XM,XN,BM,BN,RDC
          READ(1,*)(X(I),I=1,13)
          READ(1,*)ALPHMO,DELTNO,VDNO,PDNO
```

```
      WRITE (2,11)
11    FORMAT(27X,'BUS DATA'/)
      WRITE(2,12)
12    FORMAT(T10,'LINE NO.',4X,'SB',2X,'EB',12X,'R',8X,'X',8X,'YST'/)
      WRITE(2,13)(LINE(I),SB(I),EB(I),RB(I),XA(I),YST(I),I=1,NL)
13    FORMAT(T10,15,5X,13,2X,13,5X,3F10.5/)
      WRITE(2,14)
14    FORMAT(T10,'BUS NO.',7X,'PG',7X,'QG',6X,'PL',6X,'QL'/)
      WRITE(2,15)(LINE(I),PG(I),QG(I),PL(I),QL(I),I=1,NB)
15    FORMAT(T10,15,5X,4F8.4/)
      WRITE(2,16)
16    FORMAT(T12,'BUS NO.',9X,'V',9X,'TH',7X,'Q MAX',5X,'Q MIN'/)
      WRITE(2,17)(LINE(I),V(I),TH(I),QA(I),QB(I),I=1,NB)
17    FORMAT(T12,15,5X,4F10.5/)
      DO 10 I=2,NB
      P1(I)=PG(I)-PL(I)
      Q1(I)=QG(I)-QL(I)
10    CONTINUE
      DO 5 I=2,NB
      P2(I)=P1(I)
      Q2(I)=Q1(I)
5     CONTINUE
      WRITE(2,*)'P1'
      WRITE(2,21) (P1(I),I=2,NB)
      WRITE(2,*)'Q1'
      WRITE(2,18) (Q1(I),I=2,NB)
18    FORMAT(2X,10F8.3)
      DO 20 I=1,NL
20    R1(I)=RB(I)
      DO 30 I=1,NL
      SERZ(I)=CMPLX(R1(I),XA(I))
      YSHT(I)=CMPLX(0.0,YST(I))
30    CONTINUE
      DO 40 J=1,NB
      DO 40 K=1,NB
      Y(J,K)=CMPLX(0.0,0.0)
40    CONTINUE
      DO 50 I=1,NL
      SERY(I)=1.0/SERZ(I)
      L=SB(I)
      M=EB(I)
      Y(L,L)=Y(L,L)+SERY(I)/(TR(I)**2.0)+YSHT(I)/2.0
      Y(M,M)=Y(M,M)+SERY(I)+YSHT(I)/2.0
      Y(L,M)=Y(L,M)-SERY(I)/TR(I)
      Y(M,L)=Y(M,L)-SERY(I)/TR(I)
50    CONTINUE
      IF(NBCAP.EQ.0)GO TO 160
      DO 60 I=1,NBCAP
      Y(NBC(I),NBC(I))=Y(NBC(I),NBC(I))+YCAP(I)
60    CONTINUE
160   DO 70 I=1,NB
      DO 70 J=1,NB
70    B(I,J)=-AIMAG(Y(I,J))
C     ------------------------------------------------------------------
      WRITE(*,*)'FEED NO. OF ITERATIONS'
      READ(*,*)KN
      DO 500 KK=1,KN
      NH=30
      MH=NH
      WM=X(7)-X(3)
      WN=X(8)-X(4)
      VM=V(10)
```

```
        VN=V(11)
        DO 90 I=1,NB
        DO 90 J=1,NB
 90     BL(I,J)=B(I,J)
        DO 6 I=2,NB
        P1(I)=P2(I)
        Q1(I)=Q2(I)
 6      CONTINUE
        CALL POWER(P,Q,Y,V,TH,NB)
        Qmdc=((-X(12)*X(12)*BM*VM*VM)+(X(12)*X(1)*BM*VM*COS(WM)))*4.
        Qndc=((-X(13)*X(13)*BN*VN*VN)+(X(13)*X(2)*BN*VN*COS(WN)))*4.
        WRITE(2,*)'Qmdc,Qndc'
        WRITE(2,27)Qmdc,Qndc
        Q1(10)=Q1(10)-Qmdc
        Q1(11)=Q1(11)+Qndc
        WRITE(2,*)'Q1 MOD'
        WRITE(2,22) (Q1(I),I=2,NB)
        WRITE(2,*)'Q'
        WRITE(2,22) (Q(I),I=2,NB)
 22     FORMAT(2X,7F10.4)
        DO 110 I=1,NB
 110    Q1L(I)=Q1(I)
        MBB=MB
        KK3=K3
        DO 120 L=1,MB
        DO 120 M=1,MB
 120    BUS(L,M)=0.0
        NBEGIN=1
        NEND=1
 C      ---------------------------------------
        DO 80 I=2,MB
        M=MB-I+2
        IF(Q(M)-QA(M)-0.00001) 200,200,100
 200    IF(Q(M)-QB(M)+0.00001) 300,123,123
 100    Q1L(M)=QA(M)
        IF(NBEGIN.EQ.NEND) GO TO 81
        Q1M=Q1L(M)
        Q2M=Q(M)
        VIM=V(M)
        STR=STORE(NBEGIN)
        Q1L(M)=Q1L(STR)
        Q(M)=Q(STR)
        V(M)=V(STR)
        BUS(M,STR)=1
        Q1L(STR)=Q1M
        Q(STR)=Q2M
        V(STR)=VIM
        GO TO 101
 300    Q1L(M)=QB(M)
        IF(NBEGIN.EQ.NEND) GO TO 81
        Q1M=Q1L(M)
        Q2M=Q(M)
        VIM=V(M)
        STR=STORE(NBEGIN)
        Q1L(M)=Q1L(STR)
        Q(M)=Q(STR)
        V(M)=V(STR)
        BUS(M,STR)=1
        Q1L(STR)=Q1M
        Q(STR)=Q2M
        V(STR)=VIM
 101    DO 130 J=1,NB
```

```
      BLMID=BL(M,J)
      BL(M,J)=BL(STR,J)
130   BL(STR,J)=BLMID
      DO 140 K=1,NB
      BLMID=BL(K,M)
      BL(K,M)=BL(K,STR)
140   BL(K,STR)=BLMID
      NBEGIN=NBEGIN+1
      MBB=MBB-1
      KK3=KK3+1
123   STORE(NEND)=M
      NEND=NEND+1
      GO TO 125
31    MBB=MBB-1
      KK3=KK3+1
125   IF(I.EQ.MB.AND.MBB.EQ.MB) GO TO 201
80    CONTINUE
C     -------------------------------------------
      DO 150 KI=1,KK3
      DO 150 KJ=1,KK3
150   BQL(KI,KJ)=BL(KI+MBB,KJ+MBB)
23    FORMAT(2X,9F8.4)
      CALL DELPOQ(Q1L,Q,V,DQVN,KK3,MBB)
      MODE=2
      CALL ARRAY (MODE,KK3,KK3,NH,MH,S1,BQL)
      CALL MINV (S1,KK3,DD,LL,MM)
      WRITE(*,*)DD
      MODE=1
      CALL ARRAY (MODE,KK3,KK3,NH,MH,S1,BQLINV)
      CALL MULT (DV,BQLINV,DQVN,KK3)
      CALL MAX (DQVN,DQVMAX,KK3)
      CALL ADDVM (V,DV,KK3,MBB)
      DO 151 M=1,MB
      DO 151 L=1,MB
      IF(BUS(M,L).NE.1) GO TO 151
      VMID=V(M)
      V(M)=V(L)
      V(L)=VMID
151   CONTINUE
C     CALL POWER(P,Q,Y,V,TH,NB)
C     ---------------------------------------------------
      GO TO 202
201   WRITE(2,*)'X BEFORE RESQ'
      WRITE(2,41)(X(IK),IK=1,13)
      CALL RES (R,X,K1,K2,VM,VN,RDC,VDNS,ALPHMS,DELTNS,PDMR,
     1 BM,BN,XM,XN)
      CALL DLDQV (DQV,Q1,Q,V,R,K3,MB)
      CALL YBQQ (BQQ,B,X,K3,K4,K5,MB,NB,BM,BN,WM,WN,K1,K2,
     1 VM,VN,XM,XN,RDC)
      MODE=2
      CALL ARRAY (MODE,K5,K5,NH,MH,S2,BQQ)
      CALL MINV(S2,K5,D,LL1,MM1)
      MODE=1
      CALL ARRAY (MODE,K5,K5,NH,MH,S2,BQINV)
      CALL MULT (DQX,BQINV,DQV,K5)
      CALL MAX (DQV,DQVMAX,K5)
      CALL DEVIDQ (DV,DX,DQX,K3)
      CALL ADDV (V,X,DV,DX,K3,MB)
      IF(X(12).GE.1.175) X(12)=1.175
      IF(X(12).LE.0.875) X(12)=0.875
      IF(X(13).GE.1.175) X(13)=1.175
      IF (X(13).LE.0.875) X(13)=0.975
```

```
26      VM=V(10)
        VN=V(11)
        Pmdc=4.0*(X(12)*BM*X(1)*VM*SIN(X(7)-X(3)))
        Pndc=4.0*(X(13)*BN*X(2)*VN*SIN(X(8)-X(4)))
        WRITE(2,*)'Pmdc,Pndc'
        WRITE(2,27)Pmdc,Pndc
        P1(10)=P1(10)+Pmdc
        P1(11)=P1(11)+Pndc
        CALL POWER(P,Q,Y,V,TH,NB)
        CALL RES (R,X,K1,K2,VM,VN,ROC,VDNS,ALPHMS,DELTNS,PDMS,
     1  BM,BN,XM,XN)
        CALL DLDPV (DPV,P1,P,V,R,N1)
        WRITE(2,*)'DPV'
        WRITE(2,28) (DPV(I),I=1,N1)
28      FORMAT(2X,9F8.3)
        CALL MAX (DPV,DPVMAX,N3)
31      FORMAT(2X,F10.4)
        CALL YBPP (BPP,B,X,K4,N3,NB,BM,BN,WM,WN,K1,K2,VM,VN,XM,XN,ROC)
        MODE=2
        CALL ARRAY (MODE,N3,N3,NH,MH,S3,BPP)
        CALL MINV (S3,N3,D1,LL2,MM2)
        MODE=1
        CALL ARRAY (MODE,N3,N3,NH,MH,S3,BPINV)
        CALL MULT (DPX,BPINV,DPV,N3)
        CALL DEVIDP (DTH,DX,DPX,N1)
        CALL ADDTH (TH,X,DTH,DX,N1)
        IF(X(12).GE.1.175) X(12)=1.175
        IF(X(12).LE.0.875) X(12)=0.875
        IF(X(13).GE.1.175) X(13)=1.175
        IF(X(13).LE.0.875) X(13)=0.875
        WRITE(2,*)'TH'
        WRITE(2,41)(TH(IK),IK=1,N1)
        WRITE(2,*)'X'
        WRITE(2,41)(X(IK),IK=1,13)
        WRITE(2,*)'V AT THE END OF ITERATION'
        WRITE(2,41)(V(IK),IK=1,NB)
        IF((ABS(DQVMAX).LE.EPSV).AND.(ABS(DPVMAX).LE.EPSTH)) GO TO 400
        IKK=KK
500     CONTINUE
C       ^^^^^^^^^^^^^^^^^^^^^^^^^^^^^^^^^^^^^^^^^^^^^^^^^^^^^^^^^^^^^^^^^^^^^^^^^^^^^^^^^^^^^^
400     WRITE(2,32)
32      FORMAT(9X,'NO. OF ITERATION')
        WRITE(2,*) IKK
        PI=4*ATAN(1.0)
        DO 152 I=1,NB
        THETA(I)=(TH(I)*180.0)/PI
152     CONTINUE
        CALL POWER(P,Q,Y,V,TH,NB)
        WRITE(2,33)
33      FORMAT(27X,'TEST RESULTS'//)
        WRITE(2,34)
34      FORMAT(T10,'BUS NO.',5X,'VOLT',7X,'THETA',10X,'P',9X,'Q'/)
        WRITE(2,35)(LINE(I),V(I),THETA(I),P(I),Q(I),I=1,NB)
35      FORMAT(T10,I4,3X,F10.4,2X,F10.4,2X,2F10.4//)
        WRITE(2,*)'X'
        WRITE(2,36)(X(I),I=1,13)
36      FORMAT(2X,7F10.4)
        CALL LINPOW (PLN,QLN,PLNR,QLNR,Y,YST,V,TP,NL,NB,SB,EB,SFKY)
        WRITE(2,37)
37      FORMAT(27X,'LINE FLOW'/)
        WRITE(2,38)
38      FORMAT(T10,'LINE NO.',5X,'PLN',7X,'QLN',7X,'PLNR',6X,'QLNR'/)
```

```
      WRITE(2,39)(I,IMT(I),PLN(I),QLN(I),PMR(I),QMR(I),I=1,NL)
39    FORMAT(I10,I4,3X,4F10.4)
      STOP
      END
```

```
      SUBROUTINE POWER(P,Q,Y,V,TH,NB)
      DIMENSION P(30),V(30),TH(30),Y(30,30),Q(30)
      DIMENSION VC(30),VS(30)
      COMPLEX S,SUM,VC,VS,Y
      DO 10 I=1,NB
      VC(I)=CMPLX(V(I)*COS(TH(I)),-V(I)*SIN(TH(I)))
      VS(I)=CMPLX(V(I)*COS(TH(I)),V(I)*SIN(TH(I)))
10    CONTINUE
      DO 20 I=2,NB
      SUM=CMPLX(0.0,0.0)
      DO 30 J=1,NB
      SUM=SUM+VC(I)*VS(J)*Y(I,J)
30    CONTINUE
      P(I)=REAL(SUM)
      Q(I)=-AIMAG(SUM)
20    CONTINUE
      RETURN
      END
```

```
      SUBROUTINE MULT (CC,BB,AA,NN)
      DIMENSION AA(30),BB(30,30),CC(30)
C     CC=BB*AA
      DO 10 I=1,NN
      SUM=0.0
      DO 20 J=1,NN
      SUM=SUM+BB(I,J)*AA(J)
20    CONTINUE
      CC(I)=SUM
10    CONTINUE
      RETURN
      END
      SUBROUTINE MAX (A,C,MM)
      DIMENSION A(30)
      C=A(1)
      DO 10 I=2,MM
      IF(C.GE.A(I)) GO TO 10
      C=A(I)
10    CONTINUE
      RETURN
      END
```

```
        SUBROUTINE YBPP(BCPP,BC,XS,KC4,NC3,NCB,BM,BN,WM,WN,K1,K2,
     1  VM,VN,XM,XN,RDC)
        DIMENSION BCPP(30,30),BC(30,30),XS(20),BP(30,30),V(30)
        NB=NCB
        DO 10 I=1,KC4
        DO 10 J=1,KC4
10      BP(I,J)=0.0
        DO 20 I=1,NB
        DO 20 J=1,NB
20      BP(I,J)=BC(I,J)
        BP(NB-1,NB+1)=XS(12)*BM*SIN(WM)
        BP(NB-1,NB+3)=-XS(12)*BM*XS(1)*COS(WM)
        BP(NB-1,NB+7)=XS(12)*BM*XS(1)*COS(WM)
        BP(NB-1,NB+12)=XS(1)*BM*SIN(WM)
        BP(NB,NB+2)=XS(13)*BN*SIN(WN)
        BP(NB,NB+4)=-XS(13)*BN*XS(2)*COS(WN)
        BP(NB,NB+8)=XS(13)*BN*XS(2)*COS(WN)
        BP(NB,NB+13)=BN*XS(2)*SIN(WN)
        BP(NB+1,NB+1)=-K1*COS(XS(3))
        BP(NB+1,NB+3)=K1*XS(1)*SIN(XS(3))
        BP(NB+1,NB+5)=1.0
        BP(NB+2,NB+2)=-K1*COS(XS(4))
        BP(NB+2,NB+4)=K1*XS(2)*SIN(XS(4))
        BP(NB+2,NB+6)=1.0
        BP(NB+3,NB+1)=-BM*SIN(XS(3))
        BP(NB+3,NB+3)=-BM*XS(1)*COS(XS(3))
        BP(NB+3,NB+7)=BM*XS(12)*VM*COS(XS(7))
        BP(NB+3,NB+9)=K1
        BP(NB+3,NB+12)=BM*VM*SIN(XS(7))
        BP(NB+4,NB+2)=BN*SIN(XS(4))
        BP(NB+4,NB+4)=BN*XS(2)*COS(XS(4))
        BP(NB+4,NB+8)=-BN*XS(13)*VN*COS(XS(8))
        BP(NB+4,NB+9)=K1
        BP(NB+4,NB+13)=-BN*VN*SIN(XS(8))
        BP(NB+5,NB+1)=-K1*XS(10)
        BP(NB+5,NB+5)=1.0
        BP(NB+5,NB+9)=K2*XM
        BP(NB+5,NB+10)=-K1*XS(1)
        BP(NB+6,NB+2)=-K1*XS(11)
        BP(NB+6,NB+6)=1.0
        BP(NB+6,NB+9)=K2*XN
        BP(NB+6,NB+11)=-K1*XS(2)
        BP(NB+7,NB+5)=1.0
        BP(NB+7,NB+7)=K1*XS(12)*VM*SIN(XS(7))
        BP(NB+7,NB+12)=-K1*VM*COS(XS(7))
        BP(NB+8,NB+6)=1.0
        BP(NB+8,NB+8)=K1*XS(13)*VN*SIN(XS(8))
        BP(NB+8,NB+13)=-K1*VN*COS(XS(8))
        BP(NB+9,NB+5)=1.0
        BP(NB+9,NB+6)=-1.0
        BP(NB+9,NB+9)=-RDC
        BP(NB+10,NB+5)=-XS(9)
        BP(NB+10,NB+9)=-XS(5)
        BP(NB+11,NB+10)=1.0
        BP(NB+12,NB+11)=1.0
        BP(NB+13,NB+6)=1.0
        DO 30 I=1,NC3
        DO 30 J=1,NC3
        BCPP(I,J)=BP(I+1,J+1)
30      CONTINUE
        RETURN
        END
```

```
      SUBROUTINE RES(R,X,K1,K2,VM,VN,RDC,VDNS,ALPHMS,DELTNS,PDMS)
      DIMENSION R(20),X(20),RA(20),V(30)
      DO 40 I=1,13
0     RA(I)=0.0
      RA(1)=X(5)-K1*X(1)*COS(X(3))
      RA(2)=X(6)-K1*X(2)*COS(X(4))
      RA(3)=K1*X(9)-BM*(X(1)*SIN(X(3))-X(12)*VM*SIN(X(7)))
      RA(4)=K1*X(9)+BN*(X(2)*SIN(X(4))-X(13)*VN*SIN(X(8)))
      RA(5)=X(5)-K1*X(1)*X(10)+K2*XM*X(9)
      RA(6)=X(6)-K1*X(2)*X(11)+K2*XN*X(9)
      RA(7)=X(5)-K1*X(12)*VM*COS(X(7))
      RA(8)=X(6)-K1*X(13)*VN*COS(X(8))
      RA(9)=X(5)-X(6)-RDC*X(9)
      RA(13)=VDNS-X(6)
      RA(11)=ALPHMS-X(10)
      RA(12)=DELTNS-X(11)
      RA(10)=X(5)*X(9)-PDMS
      DO 50 I=1,13
0     R(I)=RA(I)
      RETURN
      END
```

```
      SUBROUTINE YBQQ(BQQ,B,X,K3,K4,K5,MB,NB,BM,BN,WM,WN,K1,K2,
     1 VM,VN,XM,XN,RDC)
      DIMENSION  BQQ(30,30),B(30,30),X(20),BQ(30,30),V(30)
      DO 10 I=1,K4
      DO 10 J=1,K4
10    BQ(I,J)=0.0
      DO 20 I=1,NB
      DO 20 J=1,NB
20    BQ(I,J)=B(I,J)
      BQ(NB-1,NB+1)=-X(12)*BM*COS(WM)
      BQ(NB-1,NB+3)=-X(12)*BM*X(1)*SIN(WM)
      BQ(NB-1,NB+7)=X(12)*BM*X(1)*SIN(WM)
      BQ(NB-1,NB+12)=-X(1)*BM*COS(WM)+2.0*X(12)*BM*VM
      BQ(NB,NB+2)= X(13)*BN*COS(WN)
      BQ(NB,NB+4)=-X(13)*BN*X(2)*SIN(WN)
      BQ(NB,NB+8)=X(13)*BN*X(2)*SIN(WN)
      BQ(NB,NB+13)=2.0*X(13)*BN*VN-X(2)*BN*COS(WN)
      BQ(NB+3,NB-1)=X(12)*BM*SIN(X(7))
      BQ(NB+7,NB-1)=-K1*X(12)*COS(X(7))
      BQ(NB+4,NB)=-X(13)*BN*SIN(X(8))
      BQ(NB+8,NB)=-K1*X(13)*COS(X(8))
      BQ(NB+1,NB+1)=-K1*COS(X(3))
      BQ(NB+1,NB+3)=K1*X(1)*SIN(X(3))
      BQ(NB+1,NB+5)=1.0
      BQ(NB+2,NB+2)=-K1*COS(X(4))
      BQ(NB+2,NB+4)=K1*X(2)*SIN(X(4))
      BQ(NB+2,NB+6)=1.0
      BQ(NB+3,NB+1)=-BM*SIN(X(3))
      BQ(NB+3,NB+3)=-BM*X(1)*COS(X(3))
      BQ(NB+3,NB+7)=BM*X(12)*VM*COS(X(7))
      BQ(NB+3,NB+9)=K1
      BQ(NB+3,NB+12)=BM*VM*SIN(X(7))
      BQ(NB+4,NB+2)=BN*SIN(X(4))
      BQ(NB+4,NB+4)=BN*X(2)*COS(X(4))
      BQ(NB+4,NB+8)=-BN*X(13)*VN*COS(X(8))
      BQ(NB+4,NB+9)=K1
      BQ(NB+4,NB+13)=-BN*VN*SIN(X(8))
      BQ(NB+5,NB+1)=-K1*X(10)
      BQ(NB+5,NB+5)=1.0
      BQ(NB+5,NB+9)=K2*XM
      BQ(NB+5,NB+10)=-K1*X(1)
      BQ(NB+6,NB+2)=-K1*X(11)
      BQ(NB+6,NB+6)=1.0
      BQ(NB+6,NB+9)=K2*XN
      BQ(NB+6,NB+11)=-K1*X(2)
      BQ(NB+7,NB+5)=1.0
      BQ(NB+7,NB+7)=K1*X(12)*VM*SIN(X(7))
      BQ(NB+7,NB+12)=-K1*VM*COS(X(7))
      BQ(NB+8,NB+6)=1.0
      BQ(NB+8,NB+8)=K1*X(13)*VN*SIN(X(8))
      BQ(NB+8,NB+13)=-K1*VN*COS(X(8))
      BQ(NB+9,NB+5)=1.0
      BQ(NB+9,NB+6)=-1.0
      BQ(NB+9,NB+9)=-RDC
      BQ(NB+10,NB+5)=-X(9)
      BQ(NB+10,NB+9)=-X(5)
      BQ(NB+11,NB+10)=1.0
      BQ(NB+12,NB+11)=1.0
      BQ(NB+13,NB+6)=1.0
      DO 30 I=1,K5
      DO 30 J=1,K5
      BQQ(I,J)=BQ(I+MB,J+MB)
```

```
30        CONTINUE
          RETURN
          END
```

```
      SUBROUTINE DEVIDP (DTH,DX,DPX,N1)
      DIMENSION DPX(30),DTH(30),DX(20)
      DO 10 I=1,N1
      DTH(I)=DPX(I)
      DO 20 I=1,13
      DX(I)=DPX(I+N1)
      RETURN
      END
      SUBROUTINE ADDTH (TH,X,DTH,DX,N1)
      DIMENSION TH(30),DTH(30),DX(20),X(20)
      DO 10 I=1,N1
      TH(I+1)=TH(I+1)+DTH(I)
      DO 20 I=1,13
      X(I)=X(I)+DX(I)
      RETURN
      END
```

```
      SUBROUTINE  DEVIDQ (DV,DX,DQX,K3)
      DIMENSION DV(30),DX(20),DQX(30)
      DO 10 I=1,K3
10    DV(I)=DQX(I)
      DO 20 I=1,13
20    DX(I)=DQX(I+K3)
      RETURN
      END
      SUBROUTINE ADDV (V,X,DV,DX,K3,MB)
      DIMENSION V(30),X(20),DV(30),DX(20)
      DO 10 I=1,K3
10    V(MB+I)=V(MB+I)+DV(I)
      DO 20 I=1,13
20    X(I)=X(I)+DX(I)
      RETURN
      END
```

```
          SUBROUTINE DELPOQ (Q1,Q,V,DQVN,K3,MB)
          DIMENSION Q1(30),Q(30),V(30),DQVN(30),DQN(30)
          DO 10 I=1,K3
          DQN(I)=Q1(MB+I)-Q(MB+I)
          DQVN(I)=DQN(I)/V(MB+1)
10        CONTINUE
          RETURN
          END
          SUBROUTINE ADDVM(V,DV,KK3,MBB)
          DIMENSION V(30),DV(30)
          DO 10 I=1,KK3
10        V(MBB+I)=V(MBB+I)+DV(I)
          RETURN
          END
```

```
      SUBROUTINE LINPOW (PLN,QLN,PLNR,QLNR,Y,YST,V,TH,NL,NB,SB,EB,SERY)
      DIMENSION PLN(30),QLN(30),PLNR(30),QLNR(30),Y(30,30),SB(30),EB(30)
      DIMENSION YST(30),YSHT(30),VC(30),VS(30),TH(30),S(30),SS(30),V(30)
      DIMENSION SERY(30)
      COMPLEX Y,YSHT,S,SS,VC,VS,SERY
      INTEGER SB,EB
      DO 10 I=1,NL
10    YSHT(I)=CMPLX(0.0,YST(I))
      DO 20 I=1,NB
      VC(I)=CMPLX(V(I)*COS(TH(I)),-V(I)*SIN(TH(I)))
      VS(I)=CMPLX(V(I)*COS(TH(I)),V(I)*SIN(TH(I)))
20    CONTINUE
      DO 30 I=1,NL
      J=SB(I)
      K=EB(I)
      S(I)=VC(J)*(VS(J)-VS(K))*SERY(I)+VC(J)*VS(J)*(YSHT(I)/2.0)
      PLN(I)=REAL(S(I))
      QLN(I)=-AIMAG(S(I))
      SS(I)=VC(K)*(VS(K)-VS(J))*Y(K,J)+VC(K)*VS(K)*(YSHT(I)/2.0)
      PLNR(I)=REAL(SS(I))
      QLNR(I)=-AIMAG(SS(I))
30    CONTINUE
      RETURN
      END
```

```
        SUBROUTINE  MINV (A,N,D,L,M)
        DIMENSION A(1),L(1),M(1)
        D=1.0
        NK=-N
        DO 80 K=1,N
        NK=NK+N
        L(K)=K
        M(K)=K
        KK=NK+K
        BIGA=A(KK)
        DO 20 J=K,N
        IZ=N*(J-1)
        DO 20 I=K,N
        IJ=IZ+I
10      IF(ABS(BIGA)-ABS(A(IJ))) 15,20,20
15      BIGA=A(IJ)
        L(K)=I
        M(K)=J
20      CONTINUE
        J=L(K)
        IF(J-K) 35,35,25
25      KI=K-N
        DO 30 I=1,N
        KI=KI+N
        HOLD=-A(KI)
        JI=KI-K+J
        A(KI)=A(JI)
30      A(JI)=HOLD
35      I=M(K)
        IF(I-K) 45,45,38
38     JP=N*(I-1)
        DO 40 J=1,N
        JK=NK+J
        JI=JP+J
        HOLD=-A(JK)
        A(JK)=A(JI)
40     A(JI)=HOLD
45      IF(BIGA) 48,46,48
46      D=0.0
        RETURN
48      DO 55 I=1,N
        IF(I-K) 50,55,50
50      IK=NK+I
        A(IK)=A(IK)/(-BIGA)
55      CONTINUE
        DO 65 I=1,N
        IK=NK+I
        HOLD=A(IK)
        IJ=I-N
        DO 65 J=1,N
        IJ=IJ+N
        IF(I-K) 60,65,60
60      IF(J-K) 62,65,62
62      KJ=IJ-I+K
        A(IJ)=HOLD*A(KJ)+A(IJ)
```

```
65       CONTINUE
         KJ=K-N
         DO 75 J=1,N
         KJ=KJ+N
         IF(J-K) 70,75,70
70       A(KJ)=A(KJ)/BIGA
75       CONTINUE
         D=D*BIGA
         A(KK)=1.0/BIGA
80       CONTINUE
         K=N
100      K=(K-1)
         IF(K) 150,150,105
105      I=L(K)
         IF(I-K) 120,120,108
108      JQ=N*(K-1)
         JR=N*(I-1)
         DO 110 J=1,N
         JK=JQ+J
         HOLD=A(JK)
         JI=JR+J
         A(JK)=-A(JI)
110      A(JI)=HOLD
120      J=M(K)
         IF(J-K) 100,100,125
125      KI=K-N
         DO 130 I=1,N
         KI=KI+N
         HOLD=A(KI)
         JI=KI-K+J
         A(KI)=-A(JI)
130      A(JI)=HOLD
         GO TO 100
150      RETURN
         END
```

```
      SUBROUTINE ARRAY (MODE,I,J,N,M,S,D)
      DIMENSION S(1),D(1)
      NI=N-1
      IF(MODE-1) 100,100,120
100   IJ=I*J+1
      NM=N*J+1
      DO 110 K=1,J
      NM=NM-NI
      DO 110 L=1,I
      IJ=IJ-1
      NM=NM-1
110   D(NM)=S(IJ)
      GO TO 140
120   IJ=0
      NM=0
      DO 130 K=1,J
      DO 125 L=1,I
      IJ=IJ+1
      NM=NM+1
125   S(IJ)=D(NM)
130   NM=NM+NI
140   RETURN
      END
```